Implementation of Edig@s version 6.1

General process

Nomination and matching process

Balancing and settlement process

N.V. Nederlandse Gasunie

Author : Nomination Support

Version : 1.02

Status : Definitive

Date : 2026-10-06

©2026

Table of contents

1. Introduction 4
2. General implementation guidelines 5
3. General process 7
3.1 Acknowledgement process (ACKNOW) 7
3.2 Functional examples 10
4. Program process (Load Forecast messages) 12
4.1 General information 12
4.2 Load Forecast / Program Document (PRODOC) 13
4.2.1 Trade program (PRODOC ALH) 13
4.2.2 Entry program (PRODOC ALI) 15
4.2.3 Exit program (PRODOC ALJ) 17
4.3 Load forecast / Program Confirmation (PROCON) 21
4.3.1 Trade program (PROCON ALK) 21
4.3.2 Entry program (PROCON ALL) 23
4.3.3 Exit program (PROCON ALM) 25
4.4 Functional examples 29
4.4.1 Pure trade 29
4.4.2 Trade and exit 29
4.4.3 Trade and entry 30
4.4.4 Trade, entry and exit 30
5. Nomination and matching process 32
5.1 General information 32
5.2 Nomination (NOMINT) 34
5.2.1 Connection point (border point) 34
5.2.2 VTP OTC (TTF) 37
5.2.3 Non-matching nomination (end user points) 39
5.3 Nomination Response (NOMRES) 42
5.3.1 Connection Point (border point) 42
5.3.2 VTP OTC (TTF) 45
5.3.4 Non-matching nomination (end user points) 47
5.4 Functional examples 50
5.4.1 Border point nomination 50
5.4.2 TTF nominations 51
5.4.3 Gas exchange nominations 52

5.4.4 BBL nominations 53
5.4.5 End user point nomination 54
6. Balancing and settlement process 55
6.1 General information 55
6.2 Market Situation message (MARSIT) 55
6.3 Balance agreements (TTF-B) 58
6.3.1 Balance Document (BALDOC) 59
6.3.2 Balance Confirmation (BALCON) (Edig@s version 5.1) 61
6.4 Functional examples 63
6.4.1 Market Situation message (MARSIT) 63
6.4.2 Balance agreement (BALDOC/BALCON) 65
7. Appendix 67
7.1 Abbreviations and terminology 67
7.2 Websites 67

1. Introduction

This document lists the implementation choices Gasunie has made for Edig@s version 6.1. All choices conform to the Message Implementation Guidelines (MIG) published by EASEE-gas.

In this document "Gasunie" may refer to any company of Gasunie which uses Edig@s messages: Gasunie Transport Services B.V.; BBL Company V.O.F.; EnergyStock; Gate Terminal; EemsEnergyTerminal . Not all companies offer all processes. See the table below.

Process	GTS	Energy Stock	BBL Company	Gate Terminal	EemsEnergy Terminal
General	Yes	Yes	Yes	Yes	Yes
Program	Yes	No	No	No	No
Nomination & Matching	Yes	Yes	Yes	Yes	Yes
Balancing & Settlement	Yes	No	No	No	No

The chapter "General implementation guidelines" contains general information relevant to all Edig@s messages used at Gasunie. The next chapters provide details on the following processes:

- General process (chapter 3);
- Program process (chapter 4);
- Nomination and matching process (chapter 5);
- Balancing and settlement process (chapter 6);
- Appendix.

How to read this document
For each process general information is provided, followed by section(s) on the related message types. For each message type the process and contents are described and an example message is provided. Functional examples are provided at the end of each chapter.

In the content tables grey, cursive text means the Gasunie implementation is exactly equal to the specification in the MIG. In all other cases the column "Content" specifies what content is possible for the element. If only specific content items are allowed, these are listed between apostrophes.

Element	Description	Content
<ExampleElement1>	Functional description of XML Element nr. 1.	Specification of all possible content
<ExampleElement2>	Functional description of XML Element nr. 2.	"01G" "02G" "04G"
<ExampleElement3>	*See MIG*	

All times in this document are in Local European Time (LET). Depending on summer (CEST) or winter time (CET) this either corresponds to UTC +2 or UTC +1.

If any questions remain after reading this document, please contact NominationSupport@Gasunie.nl.

2. General implementation guidelines

Below the general guidelines are described, relevant to all message types used by Gasunie.

Party and portfolio identification

A Gasunie shipper is known as a "Balance Responsible Party" (BRP). A BRP is identified by their EIC and can have one or more portfolios (or "accounts") with GTS and other Gasunie companies. The portfolio identifier starts with two or three letters corresponding to the Gasunie company, followed by an identifier of the BRP. Examples are provided in the table below.

BRP name	EIC	GTS portfolio	BBLC portfolio	Energy Stock portfolio	GATE portfolio
BRP 1	12X-0345-BRP1-67	**GS**BRP1			
BRP 2	98X0000000054321	**GS**BRP2	**BL**BRP2P, **BL**BRP2RF		
BRP3	55X_BRP_3_000123	**GS**BRP3		**ZW**BRP3	**LTG**BRP3

Table 3: Example portfolio combinations

Each message is sent on behalf of one portfolio. Usually more than one counter party is allowed.

Gas days and time zones

Each message must contain all hours of the gas day. For the current gas day hours in the past and hours before the lead time must be included. Only values after the lead time are processed.

A gas day for Gasunie starts and ends at 06:00 LET. All times in Edig@s messages are in UTC.

Gasunie gas day (LET)	Edig@s messages (UTC)	Remarks
06:00 – 06:00	05:00 – 05:00	During winter time
06:00 – 06:00	05:00 – 04:00	Transition day winter to summer time (23 hours)
06:00 – 06:00	04:00 – 04:00	During summer time
06:00 – 06:00	04:00 – 05:00	Transition day summer to winter time (25 hours)

Directions and quantities

For all quantities the unit kilowatt-hour (kWh) per hour is used and the direction must be specified:

- Z02: entry / buy;
- Z03: exit / sell.

Coding schemes

Several elements contain a coding scheme attribute which defines the type of identifier:

- codingScheme="305" : Energy Identification Code (EIC) (must be 16 characters);
- codingScheme="ZSO" : Code issued by the System Operator (Gasunie).

Revising messages (renominations)

Messages received <u>after</u> the matching process has started must have the same identifier as the previous message, but a higher version number. Any counterparties missing compared to a previous nomination are added again with zero values after the lead time. For example:

GSBRP sends a border point nomination on D-1 at 11:00:

Shipper pair	Nominated value
GSBRP1 – NNOBRP**1**	06:00 – 06:00 10.000

GSBRP sends a revised nomination an hour later, for the same border point (still before 14:00 LET):

Shipper pair	Nominated value
GSBRP1 – NNOBRP**2**	06:00 – 06:00 10.000

The matching has not yet started, so shipper pair GSBRP1 – NNOBRP1 is 'forgotten'. The first confirmation is sent out at 15:50:

Shipper pair	Confirmed value
GSBRP1 – NNOBRP**2**	06:00 – 06:00 10.000

At 16:10 GSBRP sends another revised nomination for the same border point:

Shipper pair	Nominated value
GSBRP1 – NNOBRP**3**	06:00 – 06:00 3.000

The next confirmation contains both shipper pairs received after 14:00 LET:

Shipper pair	Confirmed value
GSBRP1 – NNOBRP**2**	06:00 – 06:00 0
GSBRP1 – NNOBRP**3**	06:00 – 06:00 3.000

The pair GSBRP1 – NNOBRP2 is added again with zero values.

3. General process

The acknowledgement process described below is part of the section "General Process" of the Edig@s 6.1 Message Implementation Guidelines and is used by all Gasunie companies.

Every incoming Edig@s message is technically validated. Technically valid messages are then functionally validated and trigger an ACKNOW message. An invalid Edig@s message (e.g. not in accordance with the XSD) does not trigger any ACKNOW.

Message type	Sender	Receiver	Timing
Any	BRP	Gasunie	Depends on message type
ACKNOW	Gasunie	BRP	Within 5 minutes after BRP's message was received
Any	*Gasunie*	*BRP*	*Depends on message type*
ACKNOW	*BRP*	*Gasunie*	*Optional for all processes - not monitored.*

Risk of not (correctly) implementing
If not (correctly) implemented, the BRP will not know if a message was accepted, partially accepted or rejected until the next matching process. During the within day process this may mean it is impossible to book capacity or renominate for hours within the lead time and imbalance may occur.

3.1 Acknowledgement process (ACKNOW)

Purpose
The ACKNOW informs a party of the validation results of their Edig@s message. A positive ACKNOW means the message will be processed. Receiving a negative ACKNOW or no ACKNOW at all means the message will not be processed.

It is not required to send ACKNOWs to Gasunie in response to received messages. Gasunie does not monitor incoming ACKNOWs.

Process
Within five minutes of receiving a valid Edig@s message, this message is validated using a number of business rules. The results are recorded in an ACKNOW and sent back immediately.

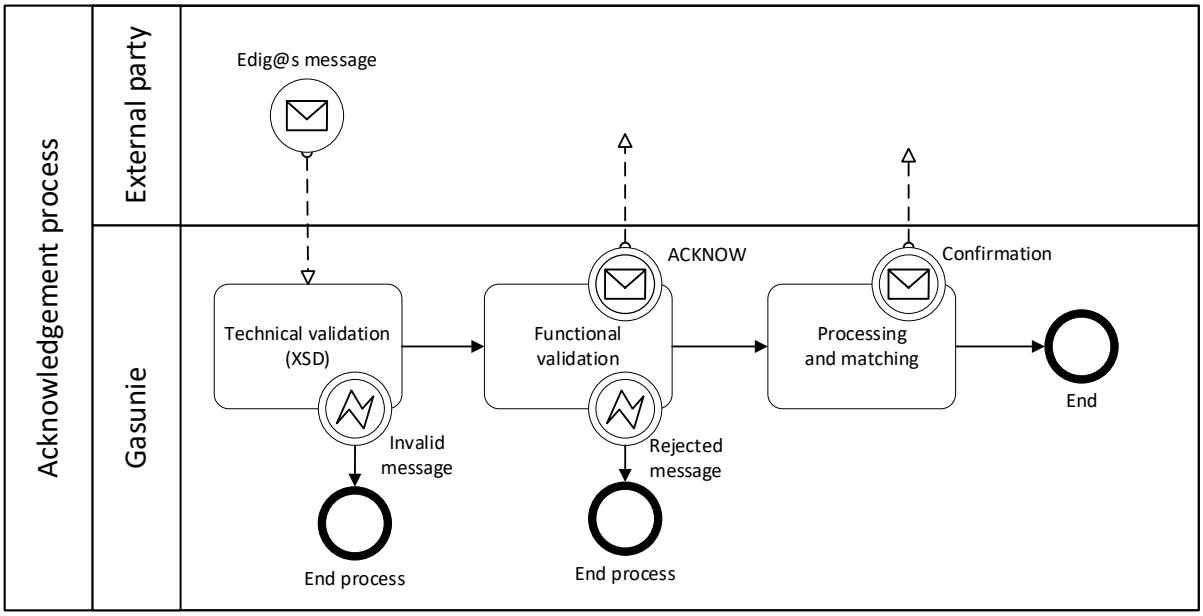

Figure 1: Validation and acknowledgement process

Contents

Element	Description	Content
<identification>	*See MIG*	
<version>	*See MIG*	
<documentCode>	Identifier for the type of document.	"294"
<creationDateTime>	*See MIG*	
<validityPeriod>	Not used.	
<issuer_MarketParticipant.identification	*See MIG*	
<issuer_MarketParticipant.marketRole.roleCode>	*See MIG*	
<recipient_MarketParticipant.identification	*See MIG*	
<recipient_MarketParticipant.marketRole.roleCode>	*See MIG*	
<receiving_Document.identification>	*See MIG*	
<receiving_Document.version>	*See MIG*	
<receiving_Document.documentCode>	*See MIG*	
<receiving_Document.creationDateTime>	*See MIG*	
<receiving_Document.payloadName>	Not used.	
<Reason> <reasonCode> <text>	Validation results.	Depends on validation results
<RejectionConnectionPoint.identification>	Not used.	

Note: the most frequently used ACKNOW reasonCodes are provided per message type in the following chapters. All codes can be found in the official Edig@s code list.

Example message


```xml
<?xml version="1.0" encoding="UTF-8"?>
<Acknowledgement_Document schemaVersion="1" xmlns="urn:easee-gas.eu:edigas:General:AcknowledgementDocument:6:1">
    <identification>ACKNOWYYYYMMDDA12345</identification>
    <version>1</version>
    <documentCode>294</documentCode>
    <creationDateTime>2023-07-01T14:05:06Z</creationDateTime>
    <issuer_MarketParticipant.identification codingScheme="305">ISSUER-EIC</issuer_MarketParticipant.identification>
    <issuer_MarketParticipant.marketRole.roleCode>ZSO</issuer_MarketParticipant.marketRole.roleCode>
    <recipient_MarketParticipant.identification codingScheme="305">BRP-
EIC</recipient_MarketParticipant.identification>
    <recipient_MarketParticipant.marketRole.roleCode>ZSH</recipient_MarketParticipant.marketRole.roleCode>
    <receiving_Document.identification>NOMINTYYYYMMDDA001</receiving_Document.identification>
    <receiving_Document.version>1</receiving_Document.version>
    <receiving_Document.documentCode>01G</receiving_Document.documentCode>
    <receiving_Document.creationDateTime>2023-07-01T14:02:40Z</receiving_Document.creationDateTime>
    <Reason>
        <reasonCode>68G</reasonCode>
        <text>Entry quantity in this nomination exceeds maximum contracted entry capacity on this connection point or
overnomination is not (yet) allowed, nominated qty: 1000 kWh|contracted qty: 800 kWh.</text>
    </Reason>
</Acknowledgement_Document>
```

3.2 Functional examples

Below three examples are provided, although many more situations are possible.

Message accepted

The BRP sends nomination message NOMINT20240101A001, version 2 at 12:16 LET (for the next gasday). This message is valid and the BRP has the correct licence and capacity booking. At 12:20 LET Gasunie sends an ACKNOW containing the following information:

Acknowledgement_Document	
Receiving_Document.identification	NOMINT20240101A001
Receiving_Document.version	2
reasonCode	01G

This means the message was accepted and processed completely and will be matched.

Message accepted but only for hours after the deadline

The BRP sends nomination message NOMINT20240101A001, version 4 at 09:26 LET during the gasday (current day nomination). This message is valid and the BRP has the correct licence and capacity booking. At 09:20 LET Gasunie sends an ACKNOW containing the following information:

Acknowledgement_Document	
Receiving_Document.identification	NOMINT20240101A001
Receiving_Document.version	4
reasonCode	01G
reasonText	Only the changed quantity values after the deadline are accepted; changed values before the deadline are ignored

This means the message was accepted and processed completely for hours after the deadline and will be matched.

Message accepted but only for hours after the deadline and some hours are not accepted

The BRP sends nomination message NOMINT20240101A001, version 6 at 11:46 LET during the gasday (current nomination). This message is valid and the BRP has the correct licence and capacity booking. At 11:50 LET Gasunie sends an ACKNOW containing the following information:

Acknowledgement_Document	
Receiving_Document.identification	NOMINT20240101A001
Receiving_Document.version	6
reasonCode	01G
reasonText	Nomination adjustment exceeds the allowed quantity. Only the changed quantity values after the deadline are accepted; changed values before the deadline are ignored

This means the message was accepted and processed completely for hours after the deadline and will be matched. For one or more hours the value nominated was to high and adjusted back to the

previous accepted value. This is possible on interconnection points with a 30-minute lead time. Please check the GTS website for more info.

Message rejected

The BRP sends nomination message NOMINT20240101A001, version 1 at 10:59:55 LET which is received at Gasunie at 11:00:05. This message is valid, but the nominated quantity exceeds the contracted capacity. At 11:05 LET Gasunie sends an ACKNOW with the following information:

Acknowledgement_Document	
Receiving_Document.identification	NOMINT20240101A001
Receiving_Document.version	1
reasonCode	68G
reasonText	Entry quantity in this nomination exceeds maximum contracted entry capacity on this connection point and overnomination is not allowed, nominated qty: 1000 kWh|contracted qty: 800 kWh

The message was rejected. The contracted quantity provided in the reasonText is the maximum amount that can be nominated.

Invalid message

The BRP sends nomination message NOMINT20240101A001, version 1 at 00:45 LET. This message is invalid because it is missing a closing tag (behind the line identification).

```
<?xml version="1.0" encoding="UTF-8"?>
<Nomination_Document xmlns="urn:easee-gas.eu:edigas:BRPNominationAndMatching:NominationDocument:6:1"
schemaVersion="”1">
<identification>NOMINT-01G-border</identification
<version>1</version>
<documentCode>01G</documentCode>
<creationDateTime>2023-02-15T09:30:47Z</creationDateTime>
<validityPeriod>2023-02-15T05:00Z/2023-02-16T05:00Z</validityPeriod>
.. etc
</Internal_Account>
</Nomination_Document>
```

This message cannot be processed and therefore no ACKNOW can be generated and sent back.

4. Program process (Load Forecast messages)

This process is part of the section "General Process" of the Edig@s 6.1 Message Implementation Guidelines and is only used by Gasunie Transport Services (GTS).

Each BRP sends a Load Forecast message (PRODOC). This is required by Dutch law. GTS acknowledges the message, processes correct messages and sends a confirmation (PROCON).

Message type	Sender	Receiver	Timing
PRODOC	BRP	GTS	Before 22:00 day ahead
ACKNOW	GTS	BRP	Within 5 minutes after PRODOC was received
PROCON	GTS	BRP	Between 14:05 and 22:05 day ahead, hourly as needed

In this document the Load Forecast is referred to as a program.

Risk of not (correctly) implementing
If no correct program is received the day ahead, our nomination system will automatically generate a program (e.g. a PROCON) containing hourly and daily totals of 0 (zero). The consequence is that damping does not apply for the concerning gas day.

4.1 General information

Purpose
A program contains an estimation by the BRP of the total gas transport for a gas day. This gives GTS information about the expected volumes for the day ahead.

The programs are also used to calculate the BRP's portfolio's imbalance position (POS) in (near) real time. This aids the process of keeping the GTS grid balanced. The related damping service GTS provides is described in the section on exit programs .

Process
Each BRP sends an entry and/or exit and/or trade program for each gas day. BRP's that apply damping use the daily damping parameter. This parameter is published via Gasport and its B2B service every day at 09:00 LET, and on the GTS website every day at 09:30 LET. Starting at 14:00 LET day ahead the programs are processed hourly, resulting in program confirmations.

For all program types the Load Forecast message type is used, further specified by the document codes ALH, ALI or ALJ. The program type required depends on the licence and capacities.

Booked capacity type	Required program type
TTF only	Trade program, containing the sum of all planned trades
Entry capacity only	Entry program, containing the sum of all planned entry and the sum of all planned trades.
Exit capacity only	Exit program, containing all planned exit per category and the sum of all planned trades.
Entry and exit capacity	Entry program containing all planned entry and the sum of all planned trades; Exit program containing all planned exit per category.

Note: *In all programs , except those with damping, all hourly totals must be 0 (zero): the total entry must equal the total exit.*
If a program is required but not received by 14:00 LET the day ahead of transport, a confirmation with default counters and quantities of 0 (zero) is automatically generated on behalf of the BRP.

Timing of Messages
Programs can be submitted up to 400 days in advance and no later than 22:00 LET the day ahead.

- 09:00 LET day ahead: GTS determines damping parameter;
- From 14:05 LET day ahead (hourly as needed): processing and confirming;
- 22:05 LET day ahead: last round of processing and confirming.

Network point
All PRODOC messages must contain the connection point VPPV with EIC 21Y000000000011R.

Counter portfolios
In the PRODOC's specific internal GTS accounts are used. The accounts to be used in the PRODOC and the accounts added to the PROCON are specified per program type.

ACKNOW reason codes
The following ACKNOW reason codes are the most frequently encountered.

ReasonCode	reasonText	Message accepted?	Extra information
01G	<null>	Yes	Message was accepted and will be processed.
04G	"The transport program is received after the deadline."	No	Message is received after the deadline of 22:00 LET the day ahead.
14G	"Unknown account identification"	No	An incorrect portfolio is used.
68G	"Transport program type not expected"	No	There is no capacity corresponding to the program type (entry or exit).
69G	"Program balance incorrect"	No	The daily total in the program is not 0 (zero).
01H	"Transport program accepted with remarks."	Yes	Damping parameter not yet available. Message will be processed later.

4.2 Load Forecast / Program Document (PRODOC)
This section details the three types of PRODOC messages.

4.2.1 Trade program (PRODOC ALH)
TTF-only BRP's submit a daily trade program containing the sum of all planned trades for a day. If no program is submitted before 14:00 LET the day ahead, GTS automatically creates a program confirmation with quantities of 0 (zero) on behalf of the BRP.

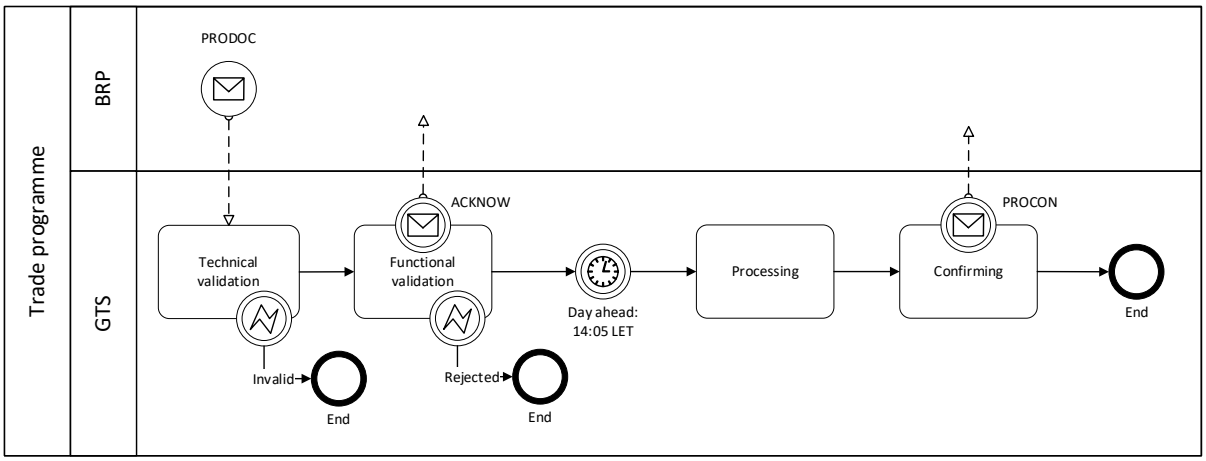

Figure 2: Message exchange for trade programs

Generic content

Element	Description	Content
<identification>	*See MIG*	
<version>	*See MIG*	
<documentCode>	Trade program	"ALH"
<creationDateTime>	*See MIG*	
<validityPeriod>	*See MIG*	
contractReference.identification	*See MIG*	
contractReference.referenceCode	Contract type reference	"ZSC"
<issuer_MarketParticipant.identification>	*See MIG*	
<issuer_MarketParticipant.marketRole.roleCode>	Role of the issuing party (BRP)	"ZSH"
<recipient_MarketParticipant.identification	*See MIG*	
<recipient_MarketParticipant.marketRole.roleCode>	Role of the receiving party (TSO)	"ZSO"

ConnectionPoint

Element	Description	Content
<ConnectionPoint> <identification>	Identification of the connection point. codingScheme="305" or codingScheme="ZSO"	305: "21Y000000000011R" ZSO: "VPPV"
<ConnectionPoint> <measureUnit>	Unit code	"KW1" (kWh per hour)

Account and Period

Element	Description	Content
<Account.identification>	Portfolio code; codingScheme = "ZSO"	"GSTPTRADE"
<Account.accountCode>	Type of the account	"ZOC"
<Account.account.Tso>	Not used	
<Period> *<timeInterval>*	*See MIG*	
<direction.gasDirectionCode>	Direction of gas transfer	"Z02" (entry/buy); "Z03" (exit/sell)
<quantity>	Amount	"0" (zero)

Example message


```xml
<?xml version="1.0" encoding="UTF-8"?>
<LoadForecast_Document xmlns="urn:easee-gas.eu:edigas:General:LoadForecastDocument:6:1" schemaVersion="1">
    <identification>PRODOCYYYYMMDD-TRADE</identification>
    <version>1</version>
    <documentCode>ALH</documentCode>
    <creationDateTime>2023-10-13T09:30:47Z</creationDateTime>
    <validityPeriod>2023-10-01T04:00Z/2023-10-02T04:00Z</validityPeriod>
    <contract_Reference.identification>GSBRP</contract_Reference.identification>
    <contract_Reference.referenceCode>ZSC</contract_Reference.referenceCode>
    <issuer_MarketParticipant.identification codingScheme="305">BRP-EIC</issuer_MarketParticipant.identification>
    <issuer_MarketParticipant.issuer_MarketRole.roleCode>ZSH</issuer_MarketParticipant.issuer_MarketRole.roleCode>
    <recipient_MarketParticipant.identification codingScheme="305">21X-NL-A-A0A0A-
Z</recipient_MarketParticipant.identification>
    <recipient_MarketParticipant.recipient_MarketRole.roleCode>ZSO</recipient_MarketParticipant.recipient_MarketRole.
roleCode>
    <ConnectionPoint>
        <identification codingScheme="305">21Y000000000011R</identification>
        <measureUnit.unitOfMeasureCode>KW1</measureUnit.unitOfMeasureCode>
        <Account>
            <identification codingScheme="ZSO">GSTPTRADE</identification>
            <accountCode>ZOC</accountCode>
            <Period>
                <timeInterval>2023-10-01T04:00Z/2023-10-02T04:00Z</timeInterval>
                <direction.gasDirectionCode>Z02</direction.gasDirectionCode>
                <quantity.amount>0</quantity.amount>
            </Period>
        </Account>
        </Account>
    </ConnectionPoint>
</LoadForecast_Document>
```


4.2.2 Entry program (PRODOC ALI)

Each BRP that has booked entry capacity submits a daily entry program.

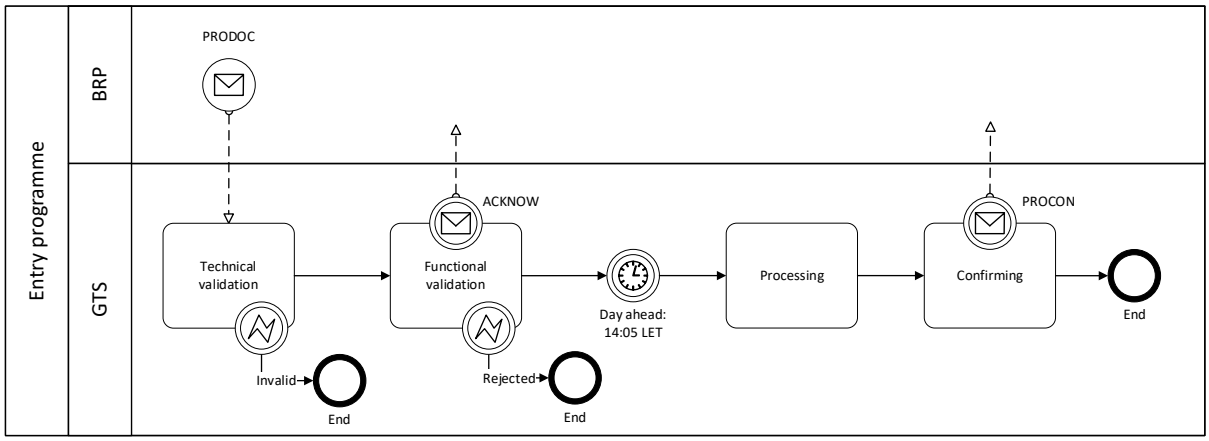

Figure 3: Message exchange for entry programs

Generic content

Element	Description	Content
<identification>	*See MIG*	
<version>	*See MIG*	
<documentCode>	Entry program	"ALI"
<creationDateTime>	*See MIG*	
<validityPeriod>	*See MIG*	
contractReference.identification	The BRP's portfolio code.	GSBRP
contractReference.referenceCode	*See MIG*	"ZSC"
<issuer_MarketParticipant.identification>	*See MIG*	
<issuer_MarketParticipant.marketRole.roleCode>	Role of the issuing party (BRP)	"ZSH"
<recipient_MarketParticipant.identification	*See MIG*	

<recipient_MarketParticipant.marketRole.roleCode>	Role of the receiving party	“ZSO”

ConnectionPoint

Element	Description	Content
<ConnectionPoint> <identification>	Identification of the connection point. codingScheme=“305” or codingScheme=“ZSO”	305: “21Y000000000011R” ZSO: “VPPV”
<ConnectionPoint> <measureUnit>	Unit code	“KW1” (kWh per hour)

Account and Period

These elements are repeated for each distinct counter portfolio.

Element	Description	Content
<Account.identification>	Portfolio code; codingScheme = “ZSO”	See ‘Reserved portfolios’.
<Account.accountCode>	Type of the account	“ZOC”
<Account.account.Tso>	Not used	
<Period> *<timeInterval>*	*See MIG*	
<direction.gasDirectionCode>	Direction of gas transfer	“Z02” (entry/buy) or “Z03” (exit/sell)
<quantity >	Amount	Natural number (0 and up)

Reserved portfolios

The following counter portfolios are used in the entry program.

Portfolio	Direction Code	Purpose	Present
GSTPENTRY	Z02	Total of all planned physical entry	Always
GSTPTRADE	Z02 or Z03	Total of all planned trades on TTF	If no separate trade PRODOC is present
GSBRP	If exit PRODOC present: Z02 Else: Z03	Transfer of total to exit program	Mandatory if exit PRODOC is used

Example message


```xml
<?xml version="1.0" encoding="UTF-8"?>
<LoadForecast_Document xmlns="urn:easee-gas.eu:edigas:General:LoadForecastDocument:6:1" schemaVersion="1">
    <identification>PRODOCYYYYMMDD-ENTRY</identification>
    <version>1</version>
    <documentCode>ALI</documentCode>
    <creationDateTime>2023-10-13T09:30:47Z</creationDateTime>
    <validityPeriod>2023-10-01T04:00Z/2023-10-02T04:00Z</validityPeriod>
     <contract_Reference.identification>ContractReference</contract_Reference.identification>
     <contract_Reference.referenceCode>ZSC</contract_Reference.referenceCode>
    <issuer_MarketParticipant.identification codingScheme="305">BRP-EIC</issuer_MarketParticipant.identification>
    <issuer_MarketParticipant.issuer_MarketRole.roleCode>ZSH</issuer_MarketParticipant.issuer_MarketRole.roleCode>
    <recipient_MarketParticipant.identification codingScheme="305">21X-NL-A-A0A0A-Z
</recipient_MarketParticipant.identification>
    <recipient_MarketParticipant.recipient_MarketRole.roleCode>ZSO</recipient_MarketParticipant.recipient_MarketRole.
roleCode>
    <ConnectionPoint>
        <identification codingScheme="ZSO">VPPV</identification>
        <measureUnit.unitOfMeasureCode>KW1</measureUnit.unitOfMeasureCode>
        <Account>
            <identification codingScheme="305">BRP-EIC</identification>
            <accountCode>ZOC</accountCode>
            <Period>
```

```
            <timeInterval>2023-10-01T04:00Z/2023-10-02T04:00Z</timeInterval>
            <direction.gasDirectionCode>Z02</direction.gasDirectionCode>
            <quantity.amount>0</quantity.amount>
        </Period>
    </Account>
    <Account>
        <identification codingScheme="ZSO">GSTPTRADE</identification>
        <accountCode>ZOC</accountCode>
        <Period>
            <timeInterval>2023-10-01T04:00Z/2023-10-02T04:00Z</timeInterval>
            <direction.gasDirectionCode>Z02</direction.gasDirectionCode>
            <quantity.amount>0</quantity.amount>
        </Period>
    </Account>
    <Account>
        <identification codingScheme="ZSO">GSTPENTRY</identification>
        <accountCode>ZOC</accountCode>
        <Period>
            <timeInterval>2023-10-01T04:00Z/2023-10-02T04:00Z</timeInterval>
            <direction.gasDirectionCode>Z02</direction.gasDirectionCode>
            <quantity.amount>0</quantity.amount>
        </Period>
    </Account>
  </ConnectionPoint>
</LoadForecast_Document>
```


4.2.3 Exit program (PRODOC ALJ)

Each BRP that has booked exit capacity with GTS submits a daily exit program. The timing of the process depends on when the exit PRODOC is received.

PRODOC received before 09:00 LET on D-1

An exit PRODOC received before 09:00 LET triggers two ACKNOW messages.

The first set of validations is performed within five minutes after receiving the PRODOC, triggering the first ACKNOW. If the validation was successful, it contains ReasonCode 01H.

The second set of validations is performed at 09:00 LET, when the damping parameter is determined. A second ACKNOW containing the result is sent. If the validation was successful, it contains ReasonCode 01G or 84G.

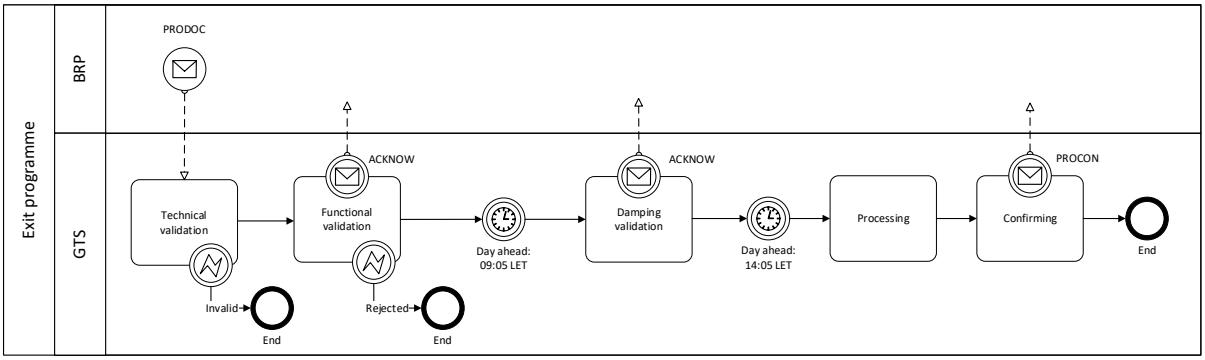

Figure 4a: Exit program before 09:00 LET

PRODOC received after 09:00 LET on D-1

An exit PRODOC received after 09:00 LET is validated within five minutes. The damping parameter is used. If the validation was successful, the ACKNOW contains ReasonCode 01G or 84G.

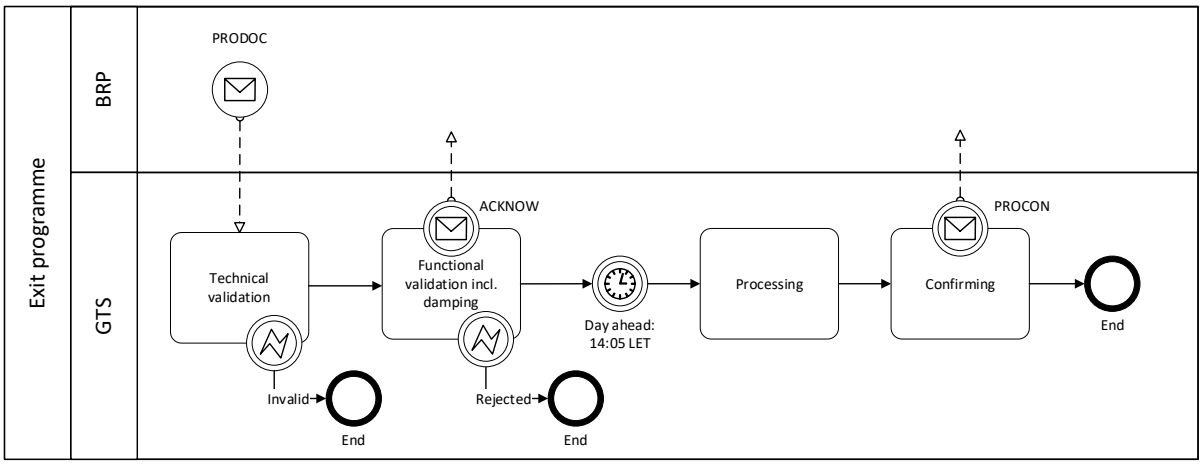

Figure 4b: Exit program after 09:00 LET

Generic content

Element	Description	Content
<identification>	*See MIG*	
<version>	*See MIG*	
<documentCode>	Trade program	"ALJ"
<creationDateTime>	*See MIG*	
<validityPeriod>	*See MIG*	
contractReference.identification	*See MIG*	
contractReference.referenceCode	Contract type reference	"ZSC"
<issuer_MarketParticipant.identification>	*See MIG*	
<issuer_MarketParticipant.marketRole.roleCode>	Role of the issuing party (BRP)	"ZSH"
<recipient_MarketParticipant.identification	*See MIG*	
<recipient_MarketParticipant.marketRole.roleCode>	Role of the receiving party	"ZSO"

ConnectionPoint

Element	Description	Content
<ConnectionPoint> <identification>	Identification of the connection point. codingScheme = "305" or codingScheme = "ZSO"	305: "21Y000000000011R" ZSO: "VPPV"
<ConnectionPoint> <measureUnit>	Unit code	"KW1" (kWh per hour)

Account and Period

These elements are repeated for each distinct counter portfolio.

Element	Description	Content
<Account.identification>	Portfolio code; codingScheme = "ZSO"	See header 'Reserved portfolios'.
<Account.accountCode>	Type of the account	"ZOC"
<Account.account.Tso>	Not used	
<Period> *<timeInterval>*	*See MIG*	
<direction.gasDirectionCode>	Direction of gas transfer	"Z02" (entry/buy) or "Z03" (exit/sell)
<quantity >	Amount	Natural number (0 and up)

Reserved portfolios

The following counter portfolios are used in the exit PRODOC.

Portfolio	Direction Code	Purpose	Present
GSTPOTHER	Z03	Physical exit for other purposes	If applicable
GSTPOTHERB	Z03	Physical exit for other purposes, part of balancing relation	If applicable (license B)
GSTPPU	Z03	Physical exit for Protected Users (PU)	If applicable (license B)
GSTPPUB	Z03	Physical exit for Protected Users (PU), part of balancing relation	If applicable (license B)
GSBRP	Z02	Transfer of total to entry program	Only if entry PRODOC is used
GSTPTRADE	Z02 or Z03	Total of all trades	Only if no entry PRODOC is used

Of the portfolios GSTPOTHER, GSTPOTHERB, GSTPPU and GSTPPUB at least one must be present.

Damping in exit programs

Damping is obligatory for portfolios which transport gas to small scale users. BRP's with capacity at end user points may request to use damping as well. See the GTS website for more information.

The damping is calculated by applying the damping formula to the hourly total exit values. The results are the hourly values for GSBRP. Submitted exit PRODOC's are validated on the correct application of the damping formula within five minutes of reception at GTS. If it was not applied correctly, all hourly values will be rearranged without damping.

The damping formula and an Excel file with the calculations are available on the GTS website: www.gasunietransportservices.nl/en/shipper-trader/balancing-regime/damping

Example message


```xml
<?xml version="1.0" encoding="UTF-8"?>
<LoadForecast_Document xmlns="urn:easee-gas.eu:edigas:General:LoadForecastDocument:6:1" schemaVersion="1">
    <identification>PRODOCYYYYMMDD-EXIT</identification>
    <version>1</version>
    <documentCode>ALJ</documentCode>
    <creationDateTime>2023-10-13T09:30:47Z</creationDateTime>
    <validityPeriod>2023-10-01T04:00Z/2023-10-02T04:00Z</validityPeriod>
    <contract_Reference.identification>GSBRP</contract_Reference.identification>
    <contract_Reference.referenceCode>ZSC</contract_Reference.referenceCode>
    <issuer_MarketParticipant.identification codingScheme="305">BRP-EIC</issuer_MarketParticipant.identification>
    <issuer_MarketParticipant.issuer_MarketRole.roleCode>ZSH</issuer_MarketParticipant.issuer_MarketRole.roleCode>
    <recipient_MarketParticipant.identification codingScheme="305">21X-NL-A-A0A0A-
Z</recipient_MarketParticipant.identification>
    <recipient_MarketParticipant.recipient_MarketRole.roleCode>ZSO</recipient_MarketParticipant.recipient_MarketRole.
roleCode>
    <ConnectionPoint>
        <identification codingScheme="305">21Y000000000011R</identification>
        <measureUnit.unitOfMeasureCode>KW1</measureUnit.unitOfMeasureCode>
        <Account>
            <identification codingScheme="ZSO">GSBRP</identification>
            <accountCode>ZOC</accountCode>
            <Period>
                <timeInterval>2023-10-01T04:00Z/2023-10-02T04:00Z</timeInterval>
                <direction.gasDirectionCode>Z02</direction.gasDirectionCode>
                <quantity.amount>0</quantity.amount>
            </Period>
        </Account>
        <Account>
            <identification codingScheme="ZSO">GSTPTRADE</identification>
            <accountCode>ZOC</accountCode>
            <Period>
                <timeInterval>2023-10-01T04:00Z/2023-10-02T04:00Z</timeInterval>
```

```xml
                <direction.gasDirectionCode>Z02</direction.gasDirectionCode>
                <quantity.amount>0</quantity.amount>
            </Period>
        </Account>
        <Account>
            <identification codingScheme="ZSO">GSTPOTHER</identification>
            <accountCode>ZOC</accountCode>
            <Period>
                <timeInterval>2023-10-01T04:00Z/2023-10-02T04:00Z</timeInterval>
                <direction.gasDirectionCode>Z02</direction.gasDirectionCode>
                <quantity.amount>0</quantity.amount>
            </Period>
        </Account>
    </ConnectionPoint>
</LoadForecast_Document>
```

4.3 Load forecast / Program Confirmation (PROCON)

Process and timing

Every day, starting at 14:05 LET, the transport programs for the following gas day are processed. The results are communicated using a program confirmation message (PROCON). If an expected transport program is missing at 14:05 LET, a PROCON with default values is generated. Any revised programs are processed every hour as needed until 22:05 LET. Please note the deadline for sending programs is 22:00 LET.

If any required program was not received at 14:05 LET, a PROCON is generated with the following counter portfolios and each quantity set to 0 (zero):

- GSTPD;
- GSTPTRADE;
- GSTPVPPVEN;
- GSTPVPPVEX.

4.3.1 Trade program (PROCON ALK)

Purpose

The purpose of the trade program confirmation is to inform the BRP of the trade program that has been accepted and processed by GTS for the following gas day. The total of trades for every hour must be zero.

Generic content

Element	Description	Content
<identification>	*See MIG*	
<version>	*See MIG*	
<documentCode>	Trade program confirmation	"ALK"
<creationDateTime>	*See MIG*	
<validityPeriod>	*See MIG*	
contractReference.identification	*See MIG*	
contractReference.referenceCode	Contract reference	"CT"
<issuer_MarketParticipant.identification>	*See MIG*	
<issuer_MarketParticipant.issuer_marketRole.roleCode>	Role of the issuing party (GTS)	"ZSO"
<recipient_MarketParticipant.identification	*See MIG*	
<recipient_MarketParticipant.recipient_MarketRole.roleCode>	Role of the receiving party (BRP)	"ZSH"
<proDoc_Document.identification>	Identifier of the corresponding PRODOC	ID of the PRODOC; If no PRODOC was received: "DEFAULT"
<proDoc_Document.version>	*See MIG*	

ConnectionPoint

Element	Description	Content
<ConnectionPoint> <identification>	Identification of the connection point.	305: "21Y000000000011R" ZSO: "VPPV"

	codingScheme = “305” or codingScheme = “ZSO”	
<ConnectionPoint> <measureUnit.unitOfMeasureCode>	Unit code	“KW1” (kWh per hour)

Account and Period

These elements are repeated for each distinct counter portfolio.

Element	Description	Content
<Account.identification>	Counter portfolio code. codingScheme = “ZSO”	See header ‘Reserved portfolios’.
<Account.accountCode>	The portfolio type.	“ZUD” or “ZTX”
<Account.account.Tso>	Not used	
<Period> *<timeInterval>*	*See MIG*	
<direction.gasDirectionCode>	Direction of gas transfer	“Z02” “Z03”
<quantity.amount>	Amount	Natural number (0 and up).
<reasonCode>	Reason for confirmed amount	See code list.

Reserved portfolios

The following counter portfolios are present in the trade PROCON. The portfolios in **bold** are not sent by the BRP, but are added by GTS.

Portfolio	Account code	Abbreviation meaning	Purpose
GSTPTRADE	“ZUD”	Transport Program: trade	The total of all planned trades on TTF
GSTPD	“ZTX”	Transport Program: delta	Difference between entry and exit
GSTPVPPVEN	“ZUD”	Transport Program: VPPV Entry	Defines the virtual entry (Z02) Z03 when value is 0
GSTPVPPVEX	“ZUD”	Transport Program: VPPV Exit	Defines the virtual exit (Z03)

Note: *The quantities for each portfolio will always be 0 (zero).*

Example message

```
<?xml version="1.0" encoding="UTF-8"?>
<LoadForecastConfirmation_Document schemaVersion="1" xmlns="urn:easee-
gas.eu:edigas:General:LoadForecastConfirmationDocument:6:1">
    <identification>PROCONYYYYMMDDA12345</identification>
    <version>1</version>
    <documentCode>ALK</documentCode>
    <creationDateTime>2023-06-30T12:05:02Z</creationDateTime>
    <validityPeriod>2023-07-01T04:00Z/2023-07-02T04:00Z</validityPeriod>
    <contract_Reference.identification>GSBRP</contract_Reference.identification>
    <contract_Reference.referenceCode>CT</contract_Reference.referenceCode>
    <issuer_MarketParticipant.identification codingScheme="305">21X-NL-A-A0A0A-
Z</issuer_MarketParticipant.identification>
    <issuer_MarketParticipant.issuer_MarketRole.roleCode>ZSO</issuer_MarketParticipant.issuer_MarketRole.roleCode>
    <recipient_MarketParticipant.identification codingScheme="305">BRP-
EIC</recipient_MarketParticipant.identification>
    <recipient_MarketParticipant.recipient_MarketRole.roleCode>ZSH</recipient_MarketParticipant.recipient_MarketRole.
roleCode>
    <proDoc_Document.identification>PRODOCYYYYMMDDA54321</proDoc_Document.identification>
    <proDoc_Document.version>1</proDoc_Document.version>
    <ConnectionPoint>
        <identification codingScheme="305">21Y000000000011R</identification>
        <measureUnit.unitOfMeasureCode>KW1</measureUnit.unitOfMeasureCode>
        <Account>
            <identification codingScheme="ZSO">GSTPD</identification>
            <accountCode>ZTX</accountCode>
```

```xml
            <Period>
                <timeInterval>2023-07-01T04:00Z/2023-07-02T04:00Z</timeInterval>
                <direction.gasDirectionCode>Z02</direction.gasDirectionCode>
                <quantity.amount>0</quantity.amount>
                <Reason>
                    <reasonCode>01G</reasonCode>
                </Reason>
            </Period>
        </Account>
        <Account>
            <identification codingScheme="ZSO">GSTPTRADE</identification>
            <accountCode>ZUD</accountCode>
            <Period>
                <timeInterval>2023-07-01T04:00Z/2023-07-02T04:00Z</timeInterval>
                <direction.gasDirectionCode>Z02</direction.gasDirectionCode>
                <quantity.amount>0</quantity.amount>
                <Reason>
                    <reasonCode>01G</reasonCode>
                </Reason>
            </Period>
        </Account>
        <Account>
            <identification codingScheme="ZSO">GSTPVPPVEN</identification>
            <accountCode>ZUD</accountCode>
            <Period>
                <timeInterval>2023-07-01T04:00Z/2023-07-02T04:00Z</timeInterval>
                <direction.gasDirectionCode>Z03</direction.gasDirectionCode>
                <quantity.amount>0</quantity.amount>
                <Reason>
                    <reasonCode>01G</reasonCode>
                </Reason>
            </Period>
        </Account>
        <Account>
            <identification codingScheme="ZSO">GSTPVPPVEX</identification>
            <accountCode>ZUD</accountCode>
            <Period>
                <timeInterval>2023-07-01T04:00Z/2023-07-02T04:00Z</timeInterval>
                <direction.gasDirectionCode>Z03</direction.gasDirectionCode>
                <quantity.amount>0</quantity.amount>
                <Reason>
                    <reasonCode>01G</reasonCode>
                </Reason>
            </Period>
        </Account>
    </ConnectionPoint>
</LoadForecastConfirmation_Document>
```


4.3.2 Entry program (PROCON ALL)

Purpose

The purpose of the entry program confirmation is to inform the BRP of the entry program that has been accepted and processed by GTS for the following gas day.

Generic content

Element	Description	Content
<identification>	*See MIG*	
<version>	*See MIG*	
<documentCode>	Entry PROCON	“ALL”
<creationDateTime>	*See MIG*	
<validityPeriod>	*See MIG*	
contractReference.identification	*See MIG*	
contractReference.referenceCode	Contract type reference	“CT”
<issuer_MarketParticipant.identification>	*See MIG*	
<issuer_MarketParticipant.issuer_marketRole.roleCode>	Role of the issuing party (GTS)	“ZSO”
<recipient_MarketParticipant.identification	*See MIG*	
<recipient_MarketParticipant.recipient_MarketRole.roleCode>	Role of the receiving party (BRP)	“ZSH”

<proDoc_Document.identification>	Identifier of the corresponding PRODOC	ID of the PRODOC; If no PRODOC was received: "DEFAULT"
<proDoc_Document.version>	*See MIG*	

ConnectionPoint

Element	Description	Content
<ConnectionPoint> <identification>	Identification of the connection point. codingScheme = "305" or codingScheme = "ZSO"	305: "21Y000000000011R" ZSO: "VPPV"
<ConnectionPoint> <measureUnit.unitOfMeasureCode>	Unit code	"KW1" (kWh per hour)

Account and Period

These elements are repeated for each distinct counter portfolio.

Element	Description	Content
<Account.identification>	Counter portfolio code. codingScheme = "ZSO"	See header 'Reserved portfolios'.
<Account.accountCode>	The portfolio type	"ZTC" or "ZTX" for GSTPD "ZOC" for all others
<Account.account.Tso>	Not used	
<Period> *<timeInterval>*	*See MIG*	
<direction.gasDirectionCode>	Direction of gas transfer	"Z02" "Z03"
<quantity.amount>	Amount	Natural number (0 and up)
<reasonCode>	Reason for confirmed amount	See code list.

Reserved portfolios

The following counter portfolios are present in the entry PROCON. The portfolios in **bold** are not sent by the BRP, but are added by GTS.

Portfolio	Account code	Direction Code	Purpose	Present
GSBRP	"ZOC"	Z03	Total of all planned exit (physical and/or trade)	If exit program present
GSTPENTRY	"ZOC"	Z02 or Z03	Total of all planned physical entry	Always Z03 when value is 0
GSTPTRADE	"ZUD"	Z02 or Z03	Total of all planned trades on TTF	If no trade program present
GSTPVPPVEX	"ZUD"	Z03	Total of all planned physical exit, copied from exit program	If exit program present
GSTPD	"ZTX"	Z02 or Z03	Difference between entry and exit (GSTPENTRY – GSTPVPPVEX)	Always

Example message

```
<?xml version="1.0" encoding="UTF-8"?>
```

```xml
<LoadForecastConfirmation_Document schemaVersion="1" xmlns="urn:easee-
gas.eu:edigas:General:LoadForecastConfirmationDocument:6:1">
    <identification>PROCONYYYYMMDDA12345</identification>
    <version>1</version>
    <documentCode>ALL</documentCode>
    <creationDateTime>2023-06-30T12:05:02Z</creationDateTime>
    <validityPeriod>2023-07-01T04:00Z/2023-07-02T04:00Z</validityPeriod>
    <contract_Reference.identification>GSBRP</contract_Reference.identification>
    <contract_Reference.referenceCode>CT</contract_Reference.referenceCode>
    <issuer_MarketParticipant.identification codingScheme="305">21X-NL-A-A0A0A-
Z</issuer_MarketParticipant.identification>
    <issuer_MarketParticipant.issuer_MarketRole.roleCode>ZSO</issuer_MarketParticipant.issuer_MarketRole.roleCode>
    <recipient_MarketParticipant.identification codingScheme="305">BRP-
EIC</recipient_MarketParticipant.identification>
    <recipient_MarketParticipant.recipient_MarketRole.roleCode>ZSH</recipient_MarketParticipant.recipient_MarketRole.
roleCode>
    <proDoc_Document.identification>PRODOCYYYYMMDDA54321</proDoc_Document.identification>
    <proDoc_Document.version>1</proDoc_Document.version>
    <ConnectionPoint>
        <identification codingScheme="305">21Y000000000011R</identification>
        <measureUnit.unitOfMeasureCode>KW1</measureUnit.unitOfMeasureCode>
        <Account>
            <identification codingScheme="ZSO">GSTPD</identification>
            <accountCode>ZTX</accountCode>
            <Period>
                <timeInterval>2023-07-01T04:00Z/2023-07-02T04:00Z</timeInterval>
                <direction.gasDirectionCode>Z02</direction.gasDirectionCode>
                <quantity.amount>0</quantity.amount>
                <Reason>
                    <reasonCode>01G</reasonCode>
                </Reason>
            </Period>
        </Account>
        <Account>
            <identification codingScheme="ZSO">GSTPTRADE</identification>
            <accountCode>ZUD</accountCode>
            <Period>
                <timeInterval>2023-07-01T04:00Z/2023-07-02T04:00Z</timeInterval>
                <direction.gasDirectionCode>Z02</direction.gasDirectionCode>
                <quantity.amount>0</quantity.amount>
                <Reason>
                    <reasonCode>01G</reasonCode>
                </Reason>
            </Period>
        </Account>
        <Account>
            <identification codingScheme="ZSO">GSTPVPPVEN</identification>
            <accountCode>ZUD</accountCode>
            <Period>
                <timeInterval>2023-07-01T04:00Z/2023-07-02T04:00Z</timeInterval>
                <direction.gasDirectionCode>Z02</direction.gasDirectionCode>
                <quantity.amount>0</quantity.amount>
                <Reason>
                    <reasonCode>01G</reasonCode>
                </Reason>
            </Period>
        </Account>
        <Account>
            <identification codingScheme="ZSO">GSTPVPPVEX</identification>
            <accountCode>ZUD</accountCode>
            <Period>
                <timeInterval>2023-07-01T04:00Z/2023-07-02T04:00Z</timeInterval>
                <direction.gasDirectionCode>Z02</direction.gasDirectionCode>
                <quantity.amount>0</quantity.amount>
                <Reason>
                    <reasonCode>01G</reasonCode>
                </Reason>
            </Period>
        </Account>
    </ConnectionPoint>
</LoadForecastConfirmation_Document>
```


4.3.3 Exit program (PROCON ALM)

Purpose

The purpose of the exit program confirmation is to inform the BRP of the exit program that has been accepted and processed by GTS for the following gas day. If applicable this program contains damped values.

Generic content

Element	Description	Content
<identification>	*See MIG*	
<version>	*See MIG*	
<documentCode>	Exit program confirmation	"ALM"
<creationDateTime>	*See MIG*	
<validityPeriod>	*See MIG*	
contractReference.identification	*See MIG*	
contractReference.referenceCode	Contract type	"CT"
<issuer_MarketParticipant.identification>	*See MIG*	
<issuer_MarketParticipant.issuer_marketRole.roleCode>	Role of the issuing party (GTS)	"ZSO"
<recipient_MarketParticipant.identification	*See MIG*	
<recipient_MarketParticipant.recipient_MarketRole.roleCode>	Role of the receiving party (BRP)	"ZSH"
<proDoc_Document.identification>	Identifier of the corresponding PRODOC	ID of the PRODOC; If no PRODOC was received: "DEFAULT"
<proDoc_Document.version>	*See MIG*	

ConnectionPoint

Element	Description	Content
<ConnectionPoint> <identification>	Identification of the connection point. codingScheme = "305" or codingScheme = "ZSO"	305: "21Y000000000011R" ZSO: "VPPV"
<ConnectionPoint> <measureUnit.unitOfMeasureCode>	Unit code	"KW1" (kWh per hour)

Account and Period

These elements are repeated for each distinct counter portfolio.

Element	Description	Content
<Account.identification>	Counter portfolio code. codingScheme = "ZSO"	See header 'Reserved portfolios'.
<Account.accountCode>	The portfolio type	"ZTX", "ZOC", "ZUD"
<Account.account.Tso>	Not used	
<Period> *<timeInterval>*	*See MIG*	
<direction.gasDirectionCode>	Direction of gas transfer	"Z02" "Z03"
<quantity.amount>	Amount	Natural number (0 and up)
<reasonCode>	Reason for confirmed amount	See code list.

Reserved portfolios

The following counter portfolios can be present in the exit PROCON. The portfolios in **bold** are not sent by the BRP, but are added by GTS.

Portfolio	Account code	Direction Code	Description	Present
GSBRP	“ZOC”	Z02	Transfer to entry program	Only if entry program present
GSTPTRADE		Z02 or Z03	Total of trades.	Only if no entry program present
GSTPOTHER	“ZOC”	Z03	Total of all other exits	If sent in PRODOC
GSTPPU		Z03	Total of exit for protected users, not under a balancing agreement	If sent in PRODOC
GSTPPUB		Z03	Total of exit for protected users under a balancing agreement	If sent in PRODOC
GSTPOTHERB		Z03	Total of exit for other users under a balancing agreement	If sent in PRODOC
GSTPD	“ZTX”	Z02 or Z03	Difference between exit and entry (- GSTPEXIT – GSTPVPPVEN) (note the double negative)	Always
GSTPEXIT	“ZOC”	Z03	Sum of GSTPPU and GSTPOTHER	Always
GSTPVPPVEN	“ZUD”	Z02 or Z03	Sum of GSBRP and GSTPTRADE	Always Z03 when value is 0

Example message


```xml
<?xml version="1.0" encoding="UTF-8"?>
<LoadForecastConfirmation_Document schemaVersion="1" xmlns="urn:easee-
gas.eu:edigas:General:LoadForecastConfirmationDocument:6:1">
    <identification>PROCON20230701A12345</identification>
    <version>1</version>
    <documentCode>ALM</documentCode>
    <creationDateTime>2023-06-30T12:05:03Z</creationDateTime>
    <validityPeriod>2023-07-01T04:00Z/2023-07-02T04:00Z</validityPeriod>
    <contract_Reference.identification>GSBRP</contract_Reference.identification>
    <contract_Reference.referenceCode>CT</contract_Reference.referenceCode>
    <issuer_MarketParticipant.identification codingScheme="305">21X-NL-A-A0A0A-
Z</issuer_MarketParticipant.identification>
    <issuer_MarketParticipant.issuer_MarketRole.roleCode>ZSO</issuer_MarketParticipant.issuer_MarketRole.roleCode>
    <recipient_MarketParticipant.identification codingScheme="305">BRP-
EIC</recipient_MarketParticipant.identification>
    <recipient_MarketParticipant.recipient_MarketRole.roleCode>ZSH</recipient_MarketParticipant.recipient_MarketRole.
roleCode>
    <proDoc_Document.identification>PRODOC20230701A54321</proDoc_Document.identification>
    <proDoc_Document.version>1</proDoc_Document.version>
    <ConnectionPoint>
        <identification codingScheme="305">21Y000000000011R</identification>
        <measureUnit.unitOfMeasureCode>KW1</measureUnit.unitOfMeasureCode>
        <Account>
            <identification codingScheme="ZSO">GSTPD</identification>
            <accountCode>ZTX</accountCode>
            <Period>
                <timeInterval>2023-07-01T04:00Z/2023-07-02T04:00Z</timeInterval>
                <direction.gasDirectionCode>Z03</direction.gasDirectionCode>
                <quantity.amount>0</quantity.amount>
                <Reason>
                    <reasonCode>01G</reasonCode>
                </Reason>
            </Period>
        </Account>
        <Account>
            <identification codingScheme="ZSO">GSTPTRADE</identification>
            <accountCode>ZUD</accountCode>
            <Period>
```

```xml
                <timeInterval>2023-07-01T04:00Z/2023-07-02T04:00Z</timeInterval>
                <direction.gasDirectionCode>Z03</direction.gasDirectionCode>
                <quantity.amount>0</quantity.amount>
                <Reason>
                    <reasonCode>01G</reasonCode>
                </Reason>
            </Period>
        </Account>
        <Account>
            <identification codingScheme="ZSO">GSTPVPPVEN</identification>
            <accountCode>ZUD</accountCode>
            <Period>
                <timeInterval>2023-07-01T04:00Z/2023-07-02T04:00Z</timeInterval>
                <direction.gasDirectionCode>Z03</direction.gasDirectionCode>
                <quantity.amount>0</quantity.amount>
                <Reason>
                    <reasonCode>01G</reasonCode>
                </Reason>
            </Period>
        </Account>
        <Account>
            <identification codingScheme="ZSO">GSTPVPPVEX</identification>
            <accountCode>ZUD</accountCode>
            <Period>
                <timeInterval>2023-07-01T04:00Z/2023-07-02T04:00Z</timeInterval>
                <direction.gasDirectionCode>Z03</direction.gasDirectionCode>
                <quantity.amount>0</quantity.amount>
                <Reason>
                    <reasonCode>01G</reasonCode>
                </Reason>
            </Period>
        </Account>
    </ConnectionPoint>
</LoadForecastConfirmation_Document>
```

4.4 Functional examples

All examples below contain time notation in UTC for Central European Summer Time (UTC+2), in which a Gasunie gas day starts and ends at 04:00 UTC. Please note that all daily totals are zero.

4.4.1 Pure trade

The BRP is active on TTF and has no physical entry or exit capacity. A trade program is required.

The BRP sends a PRODOC containing the following information:

Load Forecast Document (PRODOC)			
Document Type	ALH		
Counter Portfolio	**Time interval (UTC)**	**Direction**	**Quantity per hour**
GSTPTRADE	04:00 – 04:00	Z03 (exit)	0

The PRODOC is received at 11:23 LET the day ahead. GTS sends an ACKNOW message at 11:25 LET and a PROCON at 14:05 LET.

The PROCON contains the following information:

Load Forecast Confirmation (PROCON)			
Document Type	ALK		
Counter Portfolio	**Time interval (UTC)**	**Direction**	**Quantity per hour**
GSTPTRADE	04:00 – 04:00	Z03 (exit)	0
GSTPVPPVEN	04:00 – 04:00	Z03 (exit)	0
GSTPVPPVEX	04:00 – 04:00	Z03 (exit)	0
GSTPD	04:00 – 04:00	Z03 (exit)	0

4.4.2 Trade and exit

The BRP buys 100.000 kWh/hour on TTF and transports the same hourly amount over a border point, to another market area. The BRP does not enter gas into the GTS grid, does not supply to protected users and has no balancing agreements.

This means an exit program including the total of trades is required:

Load Forecast Document (PRODOC)			
Document Type	ALJ		
Counter Portfolio	**Time interval (UTC)**	**Direction**	**Quantity per hour**
GSTPTRADE	04:00 – 04:00	Z02 (entry)	100.000
GSTPOTHER	04:00 – 04:00	Z03 (exit)	100.000

The PROCON contains the following information:

Load Forecast Confirmation (PROCON)			
Document Type	ALM		
Counter Portfolio	**Time interval (UTC)**	**Direction**	**Quantity per hour**
GSTPTRADE	04:00 – 04:00	Z02 (entry)	100.000
GSTPOTHER	04:00 – 04:00	Z03 (exit)	100.000
GSTPD	04:00 – 04:00	Z03 (exit)	0
GSTPEXIT	04:00 – 04:00	Z03 (exit)	100.000
GSTPVPPVEN	04:00 – 04:00	Z02 (entry)	100.000

4.4.3 Trade and entry

The BRP transports 100.000 kWh/hour via a border point into the GTS grid and sells the same amount on TTF. The BRP does not transport gas out of the GTS grid, does not supply protected users and has no balancing agreements.

This means an entry program including the total of trades is required:

Load Forecast Document (PRODOC)			
Document Type	ALI		
Counter Portfolio	**Time interval (UTC)**	**Direction**	**Quantity per hour**
GSTPTRADE	04:00 – 04:00	Z03 (exit)	100.000
GSTPENTRY	04:00 – 04:00	Z02 (entry)	100.000

The PROCON contains the following information:

Load Forecast Confirmation (PROCON)			
Document Type	ALK		
Counter Portfolio	**Time interval (UTC)**	**Direction**	**Quantity per hour**
GSTPTRADE	04:00 – 04:00	Z03 (exit)	100.000
GSTPENTRY	04:00 – 04:00	Z02 (entry)	100.000
GSTPD	04:00 – 04:00	Z03 (exit)	0
GSTPVPPVEX	04:00 – 04:00	Z03 (exit)	0

4.4.4 Trade, entry and exit

The BRP transports 150.000 kWh/hour via a border point into the GTS grid, supplies industries (non-matching connection points) with 100.000 kWh/hour and sells 50.000 kWh/hour on TTF. The BRP does not supply protected users and has no balancing agreements.

Two programs are sent: An entry program including the total trade and an exit program.

The entry program contains the following information:

Load Forecast Document (PRODOC)			
Document Type	ALI		
Counter Portfolio	**Time interval (UTC)**	**Direction**	**Quantity per hour**
GSTPTRADE	04:00 – 04:00	Z03 (exit)	50.000
GSBRP	04:00 – 04:00	Z03 (exit)	100.000
GSTPENTRY	04:00 – 04:00	Z02 (entry)	150.000

The exit program contains the following information:

Load Forecast Document (PRODOC)			
Document Type	ALJ		
Counter Portfolio	**Time interval (UTC)**	**Direction**	**Quantity per hour**
GSBRP	04:00 – 04:00	Z02 (entry)	100.000
GSTPOTHER	04:00 – 04:00	Z03 (exit)	100.000

Portfolio GSBRP is used to transfer the surplus of 100.000 kWh/hour from the entry program to the exit program. This results in both programs being balanced at a total of 0 (zero).

The entry PROCON contains the following information:

Load Forecast Confirmation (PROCON)			
Document Type	ALK		
Counter Portfolio	**Time interval (UTC)**	**Direction**	**Quantity per hour**
GSBRP	04:00 – 04:00	Z03 (exit)	100.000
GSTPTRADE	04:00 – 04:00	Z03 (exit)	50.000
GSTPENTRY	04:00 – 04:00	Z02 (entry)	150.000
GSTPD	04:00 – 04:00	Z03 (exit)	0
GSTPVPPVEX	04:00 – 04:00	Z03 (exit)	0

The exit PROCON contains the following information:

Load Forecast Confirmation (PROCON)			
Document Type	ALM		
Counter Portfolio	**Time interval (UTC)**	**Direction**	**Quantity per hour**
GSBRP	04:00 – 04:00	Z02 (entry)	100.000
GSTPOTHER	04:00 – 04:00	Z03 (exit)	100.000
GSTPEXIT	04:00 – 04:00	Z03 (exit)	100.000
GSTPD	04:00 – 04:00	Z03 (exit)	0
GSTPVPPVEN	04:00 – 04:00	Z02 (entry)	100.000

5. Nomination and matching process

This process is part of the section "Nomination and Matching Process" of the Edig@s 6.1 Message Implementation Guidelines and is used by GTS, BBL Company, Energy Stock, Gate Terminal and Eems Energy Terminal.

Risk of not (correctly) implementing
Not being able to send correct nominations directly to our system and/or process confirmations, means the BRP is unable to:

- respond to unexpected mismatches or imbalances (for example, in case of IT issues or force majeure at an exchange or at GTS);
- balance their POS by requesting any transport or transmission of ownership (OTC);

Not being able to receive and process confirmations means any imbalance (which can be caused by several reasons, sometimes through no fault of the BRP) is only visible through Gasport/B2B. Gasport does not show mismatches and does not have 24/7 support.

5.1 General information

Process
The process starts when a BRP sends in a nomination (NOMINT) message. Syntactically correct messages are validated within five minutes of receipt, triggering an acknowledgement message (ACKNOW). Approved messages are then matched:

- Connection point (Border point): the nomination information is exchanged and matched with the adjacent TSO;
- Virtual Trading Point (VTP) Over The Counter (OTC) / VTP Exchange (both TTF): the nomination of the BRP is matched with the nomination(s) of the counter party or parties;
- Non matching nomination (End points): no matching takes place.

The results of these processes are confirmed to the BRP via the nomination response (NOMRES) message. The timing of these processes is described in this chapter's subsections.

Message type	Sender	Receiver	Timing
NOMINT	BRP	Gasunie	Any, accounting for lead time
ACKNOW	Gasunie	BRP	Within 5 minutes after NOMINT has been received
NOMRES	Gasunie	BRP	Depends on connection point type

Lead time
The first possible hour of transport is determined by the following method: take the (estimated) time of arrival at GTS of the nomination message, add the lead time, and then find the first following full clock hour. Which lead time applies for which connection point can be found on the GTS website.

Timing
The timing depends on the time the nomination is received, the type of network point and the lead time. The different situations and corresponding timing are described in sections 5.2.1 through 5.2.4.

General rules

1. Each (re)nomination contains only one network point.
2. A (re)nomination contains one or more counter parties.
3. BRP's that have booked capacity on a network point are expected to nominate on that network point. If the BRP does not nominate, a confirmation with default values is generated.
4. Parties that are missing on a renomination as compared to the previous nomination are added again with quantity 0 (zero) after the lead time.
5. At present Gasunie only accepts double sided nominations, which means both "sides" of a connection point must nominate. Single sided nominations are not accepted.

5.2 Nomination (NOMINT)

Purpose

The purpose of the NOMINT is to the transfer of gas from one portfolio to another, transporting it over a specific connection point and/or transferring ownership to another party.

Process

The BRP sends a NOMINT. Correct messages are validated within five minutes, triggering an ACKNOW. After processing and/or matching the results are confirmed to the BRP via the NOMRES.

ACKNOW reason codes

The following ACKNOW reason codes are the most frequently encountered.

ReasonCode	reasonText	Message accepted?	Extra information
01G	<null>	Yes	Message accepted and processed
23G	(variable)	No	Rejected, see reasonText.
68G	Example: "Quantity in this nomination exceeds maximum contracted capacity."	No	Several reasons are possible. If the contracted quantity was exceeded, the maximum quantity is provided in the reasonText.
92G	"Ignored the market operator as counter party"	Yes	Only on TTF. Nominations against a market operator are ignored. The rest of the NOMINT is accepted.
02H	"Only changed values on or after the deadline are accepted."	Yes	Message was accepted, the values before the lead time were ignored.

5.2.1 Connection point (border point)

Connection point nominations are used to transfer gas from one market area to another. These nominations are matched with the adjacent Transmission System Operator (TSO) using the DELORD and DELRES message types (not described in this document). If there is a mismatch, a matching rule is applied to determine the outcome.

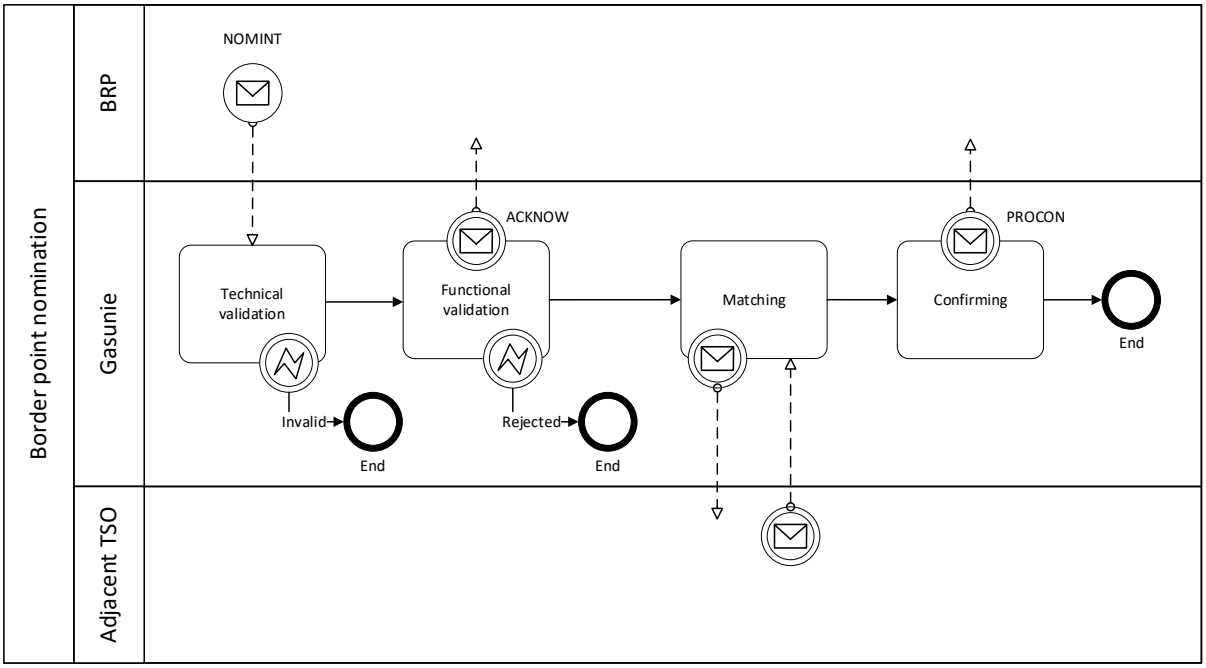

Figure 5: Border point nomination

Timing

Connection point nominations may be submitted up to 179 days in advance. A nomination received before 14:00 LET the day ahead is processed, matched and confirmed before 16:00 LET the day ahead. Nominations received after 14:00 LET (day ahead) are processed every hour after 16:00 LET and confirmed after the corresponding message from the TSO is received.

(Re)nominations received during the gas day are matched and confirmed after the corresponding message from the TSO is received. If no TSO message is received or is received too late, confirmations may contain mismatches or may not be generated at all.

Note: The process and timing for the LNG terminals differ from the processes described in this document. Information can be requested via their commercial departments.

Generic content

Element	Description	Content
<identification>	*See MIG*	
<version>	*See MIG*	
<documentCode>	Identification of the document type	“01G”
<creationDateTime>	*See MIG*	
<validityPeriod>	*See MIG*	
<issuer_MarketParticipant.identification>	*See MIG*	
<issuer_MarketParticipant.marketRole.roleCode>	Role of the issuing party (BRP)	“ZSH”
<recipient_MarketParticipant.identification	*See MIG*	
	See MIG	
<recipient_MarketParticipant.marketRole.roleCode>	Role of the receiving party	“ZSO”

Internal_Account and ConnectionPoint

Element	Description	Content

<internalAccount>	Gasunie portfolio code, format “GSBRP”. codingScheme = “305”	
<internalAccountTso>	Not used.	
<ConnectionPoint> <identification>	Identification of the connection point. codingScheme = “305” or codingScheme = “ZSO”	Gasunie code or EIC
<measureUnit.unitOfMeasureCode>	Unit code	“KW1” (kWh per hour)
<NominationType> <nominationCode>	Single sided (not used) or double sided	“A02” (double sided)

External_Account and Period

These elements should be repeated for each distinct counter portfolio.

Element	Description	Content
<External_Account.externalAccount>	Counter TSO portfolio code (not a Gasunie code); codingScheme = “ZSO”	
<External_Account.externalAccount.Tso>	*See MIG*	
<Period> *<timeInterval>*	*See MIG*	
<direction.gasDirectionCode>	Direction of gas transfer	“Z02” (entry/buy) or “Z03” (exit/sell)
<quantity.amount>	Amount to be transferred.	Natural number (0 and up)
<priority_Status.statusCode>	Not used	

Decomposition_Quantity

Not used for GTS, Energy Stock and BBL. Using firm capacity first and interruptible capacity second is automated and does not require decomposition in the NOMINT.

For GATE and Eems Energy Terminal it is mandatory to add at least one iteration of the element <Decomposition_Quantity>. It can be repeated up to three times, each with a different quantityCode. These quantities must add up to the <quantity.amount> under the element <Period>.

Element	Description	Content
<Decomposition_Quantity> <quantityCode>	Type of capacity used	“ZXD” for Firm; “ZXE” for Make Up Rights, “ZXF” for Interruptible.
<amount>	Amount per capacity type	Natural number (0 and up)

Example message


```
<?xml version="1.0" encoding="UTF-8"?>
<Nomination_Document xmlns="urn:easee-gas.eu:edigas:BRPNominationAndMatching:NominationDocument:6:1"
schemaVersion=”1">
<identification>NOMINT-01G-border</identification>
<version>1</version>
<documentCode>01G</documentCode>
<creationDateTime>2023-02-15T09:30:47Z</creationDateTime>
<validityPeriod>2023-02-15T05:00Z/2023-02-16T05:00Z</validityPeriod>
<issuer_MarketParticipant.identification codingScheme=" 305">23X-GDFS----B3GA<
issuer_MarketParticipant.identification>
<issuer_MarketParticipant.marketRole.roleCode>ZSH</issuer_MarketParticipant.marketRole.roleCode>
<recipient_MarketParticipant.identification codingScheme="305">21X-NL-A-A0A0A-
Z</recipient_MarketParticipant.identification>
```

```xml
<recipient_MarketParticipant.marketRole.roleCode>ZSO</recipient_MarketParticipant.marketRole.roleCode>
<Internal_Account>
    <internalAccount codingScheme="ZSO">GSABC</internalAccount>
    <ConnectionPoint>
        <identification codingScheme="ZSO">ZELZA1</identification>
        <measureUnit.unitOfMeasureCode>KW1</measureUnit.unitOfMeasureCode>
        <NominationType>
            <nominationCode>A02</nominationCode>
            <External_Account>
                <externalAccount codingScheme="ZSO">FLXABC</externalAccount>
                <Period>
                    <timeInterval>2023-02-15T05:00Z/2023-02-15T20:00Z</timeInterval>
                    <direction.gasDirectionCode>Z02</direction.gasDirectionCode>
                    <quantity.amount>100</quantity.amount>
                </Period>
                <Period>
                    <timeInterval>2023-02-15T20:00Z/2023-02-16T05:00Z</timeInterval>
                    <direction.gasDirectionCode>Z02</direction.gasDirectionCode>
                    <quantity.amount>120</quantity.amount>
                </Period>
            </External_Account>
        </NominationType>
    </ConnectionPoint>
</Internal_Account>
</Nomination_Document>
```


5.2.2 VTP OTC (TTF)

A Virtual Trading Point (VTP) Over The Counter (OTC) nomination is sent to the connection point TTF. All counter parties must be GTS portfolios. The TTF nomination received from the BRP is matched with the nomination(s) received from the counter party or parties.

If there is a mismatch between initial nominations, the 'lesser of' business rule is applied and the lowest value is confirmed. If the nominations match, the deal becomes settled and can only be changed by a new exact match.

Further aggregated confirmations are automatically generated on the virtual network point 'Transfer GTS to Trading Zone' (GTSTRZ). These contain the total of all confirmed trades and are sent to the nominating party for information. These messages are not specifically described in this document.

Note: BRP's that are also customers with BBL may include their BBL counter portfolio in the trade nomination. This is optional but not necessary.

Note: If a BRP sends a TTF nomination with a market operator as counter party, this counter party is ignored. The other counter parties and quantities in the message are accepted.

Timing

TTF nominations can be submitted up to 400 days in advance and are matched the next half or full hour after receipt. A lead time of 30 minutes applies.

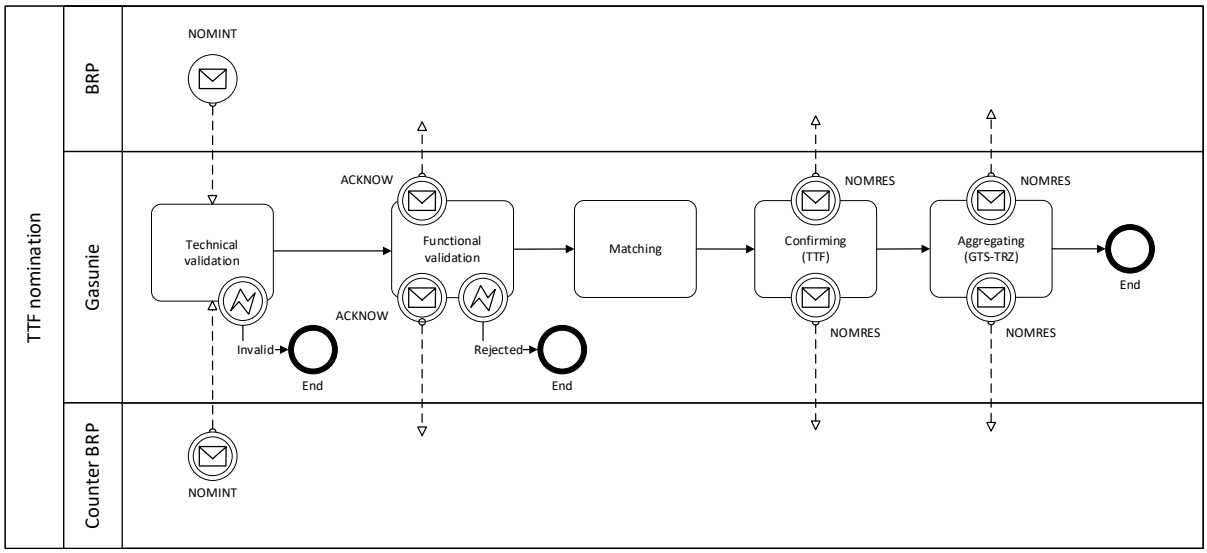

Figure 6: TTF nominations

Generic content

Element	Description	Content
<identification>	*See MIG*	
<version>	*See MIG*	
<documentCode>	Identification of the document type	”02G”
<creationDateTime>	*See MIG*	
<validityPeriod>	*See MIG*	
<issuer_MarketParticipant.identification>	*See MIG*	
<issuer_MarketParticipant.marketRole.roleCode>	Role of the issuing party (BRP)	”ZSH”
<recipient_MarketParticipant.identification	*See MIG*	
	See MIG	
<recipient_MarketParticipant.marketRole.roleCode>	Role of the receiving party	”ZUK”

Internal_Account and ConnectionPoint

Element	Description	Content
<internalAccount>	Gasunie portfolio code, format “GSBRP” of issuer; codingScheme = “ZSO”	
<internalAccountTso>	Not used.	
<ConnectionPoint> <identification>	Identification of the connection point. codingScheme = “305” or codingScheme = “ZSO”	305: “21YNL----TTF---1” ZSO: “TTF”
<measureUnit.unitOfMeasureCode>	Unit code	“KW1” (kWh per hour)
<NominationType> <nominationCode>	Single sided (not used) or double sided	“A02” (double sided)

External_Account and Period

These elements should be repeated for each distinct counter portfolio.

Element	Description	Content

<External_Account.externalAccount>	Counter Gasunie portfolio code; codingScheme = "ZSO"	Any GTS (or BBL) portfolio
<External_Account.externalAccount.Tso>	*See MIG*	
<Period> *<timeInterval>*	*See MIG*	
<direction.gasDirectionCode>	Direction of gas transfer	"Z02" (entry/buy); "Z03" (exit/sell)
<quantity.amount>	Amount to be transferred.	Natural number (0 and up)
<priority_Status.statusCode>	Not used	

Decomposition_Quantity

Not used for VTP OTC nominations.

Example message

```
<?xml version="1.0" encoding="UTF-8"?>
<Nomination_Document xmlns="urn:easee-gas.eu:edigas:BrpNominationAndMatching:NominationDocument:6:1"
schemaVersion="1">
  <identification>NOMINT20231115A0001</identification>
  <version>1</version>
  <documentCode>02G</documentCode>
  <creationDateTime>2023-11-14T14:50:00Z</creationDateTime>
  <validityPeriod>2023-11-15T05:00Z/2023-11-16T05:00Z</validityPeriod>
  <issuer_MarketParticipant.identification
codingScheme="305">12XPLACEHOLDER_1</issuer_MarketParticipant.identification>
  <issuer_MarketParticipant.marketRole.roleCode>ZSH</issuer_MarketParticipant.marketRole.roleCode>
  <recipient_MarketParticipant.identification codingScheme="305">21X-NL-A-A0A0A-
Z</recipient_MarketParticipant.identification>
  <recipient_MarketParticipant.marketRole.roleCode>ZUK</recipient_MarketParticipant.marketRole.roleCode>
  <Internal_Account>
    <internalAccount codingScheme="ZSO">GSBRP</internalAccount>
    <ConnectionPoint>
      <identification codingScheme="305">21YNL----TTF---1</identification>
      <measureUnit.unitOfMeasureCode>KW1</measureUnit.unitOfMeasureCode>
      <NominationType>
        <nominationCode>A02</nominationCode>
        <External_Account>
          <externalAccount codingScheme="ZSO">GSCOUNTER</externalAccount>
          <Period>
            <timeInterval>2023-11-15T05:00Z/2023-11-16T05:00Z</timeInterval>
            <direction.gasDirectionCode>Z02</direction.gasDirectionCode>
            <quantity.amount>5000</quantity.amount>
          </Period>
        </External_Account>
      </NominationType>
    </ConnectionPoint>
  </Internal_Account>
</Nomination_Document>
```

5.2.3 Non-matching nomination (end user points)

The non-matching nomination is sent to end user points such as industries. The confirmed quantity is equal to the nominated quantity as long as sufficient capacity is available.

Timing

Nominations received before 14:00 LET the day ahead are processed and confirmed before 16:00 LET the day ahead. Nominations received after 14:00 LET the day ahead are processed and confirmed every next whole or half hour (hh:05 or hh:35).

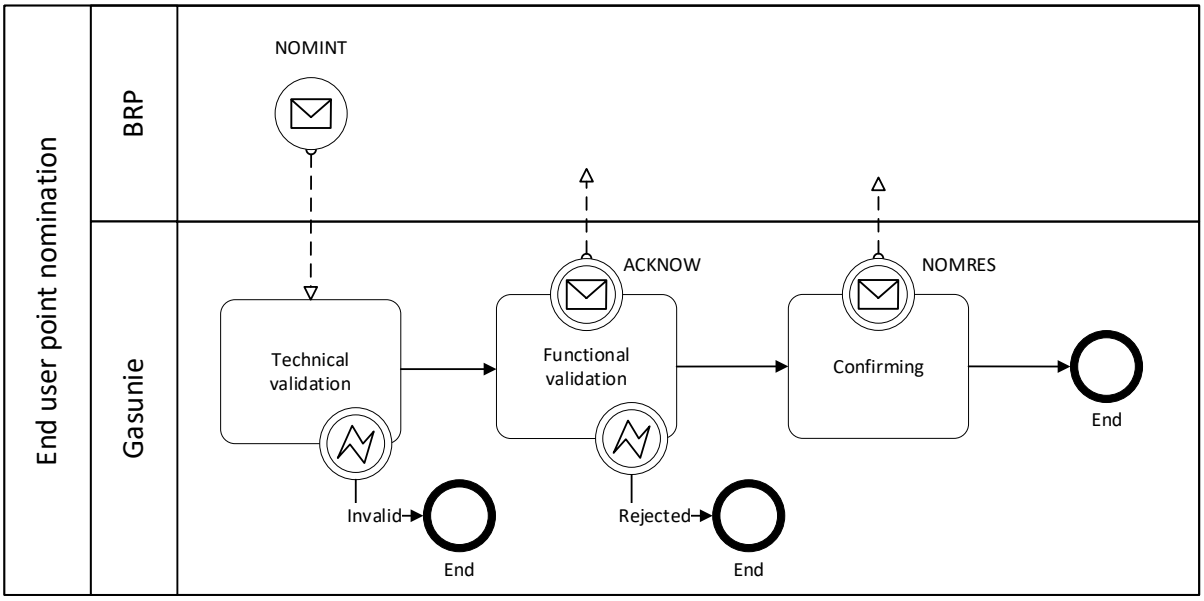

Figure 7: End user point nomination process

Generic content

Element	Description	Content
<identification>	*See MIG*	
<version>	*See MIG*	
<documentCode>	Identification of the document type	“04G”
<creationDateTime>	*See MIG*	
<validityPeriod>	*See MIG*	
<issuer_MarketParticipant.identification>	*See MIG*	
<issuer_MarketParticipant.marketRole.roleCode>	Role of the issuing party (BRP)	”ZSH”
<recipient_MarketParticipant.identification	*See MIG*	
	See MIG	
<recipient_MarketParticipant.marketRole.roleCode>	Role of the receiving party	“ZSO”

Internal_Account and ConnectionPoint

Element	Description	Content
<internalAccount>	Gasunie portfolio code, format “GSBRP”. codingScheme = “ZSO”	
<internalAccountTso>	Not used.	
<ConnectionPoint> <identification>	Identification of the connection point. codingScheme = “305” or codingScheme = “ZSO”	ZSO: Gasunie code; 305: EIC
<measureUnit.unitOfMeasureCode>	Unit code	“KW1” (kWh per hour)
<NominationType> *<nominationCode>*	*See MIG* *(not used)*	

External_Account and Period

Element	Description	Content
<External_Account.externalAccount>	Placeholder counter code	“END USER”
<External_Account.externalAccount.Tso>	*See MIG*	
<Period> *<timeInterval>*	*See MIG*	
<direction.gasDirectionCode>	Direction of gas transfer	“Z03” (exit/sell)
<quantity.amount>	Amount to be transferred.	Natural number (0 and up)
<priority_Status.statusCode>	Not used.	

Decomposition_Quantity

Not used for non-matching nominations.

Example message


```xml
<?xml version="1.0" encoding="UTF-8"?>
<Nomination_Document xmlns="urn:easee-gas.eu:edigas:BrpNominationAndMatching:NominationDocument:6:1"
schemaVersion="1">
  <identification>NOMINT20231115A0001</identification>
  <version>1</version>
  <documentCode>04G</documentCode>
  <creationDateTime>2023-11-14T14:50:00Z</creationDateTime>
  <validityPeriod>2023-11-15T05:00Z/2023-11-16T05:00Z</validityPeriod>
  <issuer_MarketParticipant.identification
codingScheme="305">12XPLACEHOLDER_1</issuer_MarketParticipant.identification>
  <issuer_MarketParticipant.marketRole.roleCode>ZSH</issuer_MarketParticipant.marketRole.roleCode>
  <recipient_MarketParticipant.identification codingScheme="305">21X-NL-A-A0A0A-
Z</recipient_MarketParticipant.identification>
  <recipient_MarketParticipant.marketRole.roleCode>ZSO</recipient_MarketParticipant.marketRole.roleCode>
  <Internal_Account>
    <internalAccount codingScheme="ZSO">GSBRP</internalAccount>
    <ConnectionPoint>
      <identification codingScheme="ZSO">ENDUSERPOINT</identification>
      <measureUnit.unitOfMeasureCode>KW1</measureUnit.unitOfMeasureCode>
        <External_Account>
          <externalAccount codingScheme="ZSO">END USER</externalAccount>
          <Period>
            <timeInterval>2023-11-15T05:00Z/2023-11-16T05:00Z</timeInterval>
            <direction.gasDirectionCode>Z03</direction.gasDirectionCode>
            <quantity.amount>10000</quantity.amount>
          </Period>
        </External_Account>
      </NominationType>
    </ConnectionPoint>
  </Internal_Account>
</Nomination_Document>
```

5.3 Nomination Response (NOMRES)

Purpose

The purpose of the NOMRES is to confirm the amount of gas that will be transferred, either transporting it over a specific connection point and/or transferring ownership to another party.

Process

The BRP sends a NOMINT. Correct messages are validated within five minutes, triggering an ACKNOW. After processing and/or matching the results are confirmed to the BRP via the NOMRES.

NOMRES status codes

The most frequently used statusCodes in the NOMRES are described below.

StatusCode		Extra information
06G	Mismatch	Not on end user points
07G	Interrupted	
12G	Settled	Only on TTF
13G	Unchanged Settled	Only on TTF
14G	No Counter nomination	Only on TTF
35G	Counter Party Prevailed	
37G	Reduced Nominated Quantity	Only GATE and Eems Energy Terminal

5.3.1 Connection Point (border point)

Connection point confirmations contain information on the amount of gas to be transferred from one market area to another.

Generic content

Element	Description	Content
<identification>	*See MIG*	
<version>	*See MIG*	
<applicationContext>	Not used	
<documentCode>	Identification of the document type	08G
<creationDateTime>	*See MIG*	
<validityPeriod>	*See MIG*	
<issuer_MarketParticipant.identification>	*See MIG*	
<issuer_MarketParticipant.marketRole.roleCode>	Role of the issuing party (TSO)	ZSO
<recipient_MarketParticipant.identification	*See MIG*	
<recipient_MarketParticipant.marketRole.roleCode>	Role of the receiving party (BRP)	ZSH

Corresponding nomination document

Element	Description	Content
<nomination_Document.identification>	*See MIG*	
<nomination_Document.version>	*See MIG*	
<nomination_Document.documentCode>	*See MIG*	
<nomination_Document.singleSidedBRPSource_MarketParticipant.identification>	Not used	

If there is no corresponding NOMINT the nomination_Document.identification will be “DEFAULT”, nomination_Document.version “1” and the external account “UNKNOWN”.

Internal_Account and ConnectionPoint

Element	Description	Content
<internalAccount>	Gasunie portfolio code, format "GSBRP". codingScheme = "305"	
<internalAccountTso>	Not used	
<ConnectionPoint> <identification>	Identification of the connection point. codingScheme = "305" or codingScheme = "ZSO"	Gasunie code or EIC
<measureUnit.unitOfMeasureCode>	Unit code	"KW1" (kWh per hour)
<NominationType> <nominationCode>	Single sided or double sided	"A02" (double sided)

External_Account and Period

These elements are repeated for each distinct counter portfolio.

Element	Description	Content
<External_Account.externalAccount>	Counter TSO portfolio code; codingScheme = "ZSO"	Cannot be a Gasunie code.
<External_Account.externalAccount.Tso>	Not used.	
<InformationOrigin_TimeSeries.businessCode>	*See MIG*	See table 'Possible businessCodes'
<Period> *<timeInterval>*	*See MIG*	
<direction.gasDirectionCode>	Direction of gas transfer	"Z02" (entry/buy); "Z03" (exit/sell)
<quantity.amount>	Amount to be transferred.	Natural number (0 and up)
<Status> *<statusCode>*	*See MIG*	See table 'NOMRES status codes' under section 5.3

Possible businessCodes

The following codes can be present in the NOMRES. The 15G and 18G quantities are only present if these are provided by the adjacent TSO.

businessCode	Description
14G	Processed by system operator: the value that was accepted and possibly modified by the system operator (Gasunie)
15G	Processed by adjacent system operator: the value that was accepted and possibly modified by the adjacent system operator
16G	Confirmed
18G	Counterpart nomination: the value that was nominated with and accepted by the adjacent system operator

Decomposition_Quantity

Not used for GTS, Energy Stock and BBL.

For the LNG connection points Gate (Rotterdam) and Eems Energy Terminal (Eemshaven) the same elements <Decomposition_Quantity> as received in the nomination are present.

Element	Description	Content
<Decomposition_Quantity> <quantityCode>	Type of capacity used	"ZXD" for Firm, "ZXE" for Make Up Rights, "ZXF" for Interruptible.
<amount>		Natural number (0 and up)

Example message


```xml
<?xml version="1.0" encoding="UTF-8"?>
<NominationResponse_Document xmlns="urn:easee-gas.eu:edigas:BrpNominationAndMatching:NominationResponseDocument:6:1"
schemaVersion="1">
    <identification>NOMRES-01G-Border</identification>
    <version>1</version>
    <documentCode>08G</documentCode>
    <creationDateTime>2020-01-12T19:30:47Z</creationDateTime>
    <validityPeriod>2020-01-13T05:00Z/2020-01-14T05:00Z</validityPeriod>
    <issuer_MarketParticipant.identification codingScheme="305">IssuerEIC</issuer_MarketParticipant.identification>
    <issuer_MarketParticipant.marketRole.roleCode>ZSO</issuer_MarketParticipant.marketRole.roleCode>
    <recipient_MarketParticipant.identification
codingScheme="305">RecipientEIC</recipient_MarketParticipant.identification>
    <recipient_MarketParticipant.marketRole.roleCode>ZSH</recipient_MarketParticipant.marketRole.roleCode>
    <nomination_Document.identification>NOMINT-01G-Border</nomination_Document.identification>
    <nomination_Document.version>1</nomination_Document.version>
    <nomination_Document.documentCode>01G</nomination_Document.documentCode>
    <Internal_Account>
        <internalAccount codingScheme="ZSO">GSBRP</internalAccount>
        <ConnectionPoint>
            <identification codingScheme="305">ConnectionPoint_EIC</identification>
            <measureUnit.unitOfMeasureCode>KW1</measureUnit.unitOfMeasureCode>
            <NominationType>
                <nominationCode>A02</nominationCode>
                <External_Account>
                    <externalAccount codingScheme="ZSO">COUNTERPARTY_ID</externalAccount>
                    <InformationOrigin_TimeSeries>
                        <businessCode>14G</businessCode>
                        <Period>
                            <timeInterval>2020-01-13T05:00Z/2020-01-14T05:00Z</timeInterval>
                            <direction.gasDirectionCode>Z02</direction.gasDirectionCode>
                            <quantity.amount>100</quantity.amount>
                        </Period>
                    </InformationOrigin_TimeSeries>
                    <InformationOrigin_TimeSeries>
                        <businessCode>15G</businessCode>
                        <Period>
                            <timeInterval>2020-01-13T05:00Z/2020-01-14T05:00Z</timeInterval>
                            <direction.gasDirectionCode>Z03</direction.gasDirectionCode>
                            <quantity.amount>100</quantity.amount>
                        </Period>
                    </InformationOrigin_TimeSeries>
                    <InformationOrigin_TimeSeries>
                        <businessCode>16G</businessCode>
                        <Period>
                            <timeInterval>2020-01-13T05:00Z/2020-01-14T05:00Z</timeInterval>
                            <direction.gasDirectionCode>Z02</direction.gasDirectionCode>
                            <quantity.amount>100</quantity.amount>
                        </Period>
                    </InformationOrigin_TimeSeries>
                    <InformationOrigin_TimeSeries>
                        <businessCode>18G</businessCode>
                        <Period>
                            <timeInterval>2020-01-13T05:00Z/2020-01-14T05:00Z</timeInterval>
                            <direction.gasDirectionCode>Z03</direction.gasDirectionCode>
                            <quantity.amount>100</quantity.amount>
                        </Period>
                    </InformationOrigin_TimeSeries>
                </External_Account>
            </NominationType>
        </ConnectionPoint>
    </Internal_Account>
</NominationResponse_Document>
```

5.3.2 VTP OTC (TTF)

The TTF NOMRES contains the matching results for TTF.

Further aggregated confirmations are automatically generated on virtual network points 'Transfer GTS to Trading Zone' (GTSTRZ) and/or ' Transfer BBL to Trading Zone' (BBLTRZ). These contain the total of all confirmed trades and are sent to the nominating party for information. These messages are not specifically described in this document.

Trading zone confirmations

Due to the integration of the BBL and GTS market areas all TTF nominations lead not only to TTF confirmations, but also to aggregated confirmations on the virtual network point 'Transfer GTS to Trading Zone'. These are similar to TTF confirmations but contain a different network point and only one shipper pair (the BRP versus 'END USER') with the total of trades per hour.

If the BRP is active on the BBL

If the BRP is also active on the BBL, the BBL portfolios position is automatically transferred to the GTS portfolio via TTF. This means a BBL nomination leads to a number of confirmations:

- NOMRES from BBL Company to the BBL portfolio on connection point BBL Bacton;
- NOMRES from BBL Company to the BBL portfolio on TTF;
- NOMRES from GTS to the GTS portfolio on TTF.

It is possible but not required for the BRP to nominate the BBL to GTS quantities on TTF.

Generic content

Element	Description	Content
<identification>	*See MIG*	
<version>	*See MIG*	
<applicationContext>	Not used	
<documentCode>	Identification of the document type	"08G"
<creationDateTime>	*See MIG*	
<validityPeriod>	*See MIG*	
<issuer_MarketParticipant.identification>	*See MIG*	
<issuer_MarketParticipant.marketRole.roleCode>	Role of the issuing party (TSO)	"ZSO"
<recipient_MarketParticipant.identification	*See MIG*	
<recipient_MarketParticipant.marketRole.roleCode>	Role of the receiving party (BRP)	"ZSH"

Corresponding nomination document

Element	Description	Content
<nomination_Document.identification>	*See MIG*	
<nomination_Document.version>	*See MIG*	
<nomination_Document.documentCode>	*See MIG*	
<nomination_Document.singleSidedBRPSource _MarketParticipant.identification>	Not used	

Internal_Account and ConnectionPoint

Element	Description	Content

<internalAccount>	Gasunie portfolio code, format “GSBRP”. codingScheme = “ZSO”	
<internalAccountTso>	Not used	
<ConnectionPoint> <identification>	Identification of the connection point. codingScheme = “305” or codingScheme = “ZSO”	Gasunie code or EIC
<measureUnit.unitOfMeasureCode>	Unit code	“KW1” (kWh per hour)
<NominationType> <nominationCode>	Double sided	“A02” (double sided)

Table 1: Content of the NOMRES (VTP OTC) - Internal_account & ConnectionPoint

External_Account and Period

These elements are repeated for each distinct counter portfolio.

Element	Description	Content
<External_Account.externalAccount>	Counter portfolio code; codingScheme = “ZSO”	Any GTS or BBL portfolio
<External_Account.externalAccount.Tso>	Not used.	
<InformationOrigin_TimeSeries.businessCode>	*See MIG*	“16G”, “18G” See table ‘Possible businessCodes’
<Period> *<timeInterval>*	*See MIG*	
<direction.gasDirectionCode>	Direction of gas transfer	“Z02” (entry/buy) or “Z03” (exit/sell)
<quantity.amount>	Amount to be transferred.	Natural number (0 and up)
<Status> <statusCode>	Matching status	See table ‘Status codes’

Possible businessCodes

businessCode	Description
16G	Confirmed
18G	The value that was nominated by the counter party

Status codes

The following status codes may be present.

statusCode	Description	Practical meaning
06G	Mismatch	Both parties nominated different amounts and the lesser value was confirmed
12G	Settled	Both parties nominated the same amount and the deal is settled
13G	Unchanged settled	One party renominated after a deal was settled. The settled deal is unchanged.
14G	No counter nomination	The counter party has not (yet) nominated.

Decomposition_Quantity

Not used for VTP OTC confirmations.

Example message

```xml
<?xml version="1.0" encoding="UTF-8"?>
<NominationResponse_Document xmlns="urn:easee-gas.eu:edigas:BrpNominationAndMatching:NominationResponseDocument:6:1"
schemaVersion="1">
    <identification>NOMRES-02G-OTC</identification>
    <version>1</version>
    <documentCode>08G</documentCode>
    <creationDateTime>2020-01-12T19:30:47Z</creationDateTime>
    <validityPeriod>2020-01-13T05:00Z/2020-01-14T05:00Z</validityPeriod>
    <issuer_MarketParticipant.identification codingScheme="305">IssuerEIC</issuer_MarketParticipant.identification>
    <issuer_MarketParticipant.marketRole.roleCode>ZUK</issuer_MarketParticipant.marketRole.roleCode>
    <recipient_MarketParticipant.identification
codingScheme="305">RecipientEIC</recipient_MarketParticipant.identification>
    <recipient_MarketParticipant.marketRole.roleCode>ZSH</recipient_MarketParticipant.marketRole.roleCode>
    <nomination_Document.identification>NOMINT-02G-OTC</nomination_Document.identification>
    <nomination_Document.version>1</nomination_Document.version>
    <nomination_Document.documentCode>02G</nomination_Document.documentCode>
    <Internal_Account>
        <internalAccount codingScheme="ZSO">GSBRP</internalAccount>
        <ConnectionPoint>
            <identification codingScheme="305">21YNL----TTF---1</identification>
            <measureUnit.unitOfMeasureCode>KW1</measureUnit.unitOfMeasureCode>
            <NominationType>
                <nominationCode>A02</nominationCode>
                <External_Account>
                    <externalAccount codingScheme="ZSO">GSCOUNTERBRP1</externalAccount>
                    <InformationOrigin_TimeSeries>
                        <businessCode>16G</businessCode>
                        <Period>
                            <timeInterval>2020-01-13T05:00Z/2020-01-13T06:00Z</timeInterval>
                            <direction.gasDirectionCode>Z02</direction.gasDirectionCode>
                            <quantity.amount>100</quantity.amount>
                        </Period>
                    </InformationOrigin_TimeSeries>
                    <InformationOrigin_TimeSeries>
                        <businessCode>18G</businessCode>
                        <Period>
                            <timeInterval>2020-01-13T05:00Z/2020-01-13T06:00Z</timeInterval>
                            <direction.gasDirectionCode>Z03</direction.gasDirectionCode>
                            <quantity.amount>100</quantity.amount>
                        </Period>
                    </InformationOrigin_TimeSeries>
                </External_Account>
                <External_Account>
                    <externalAccount codingScheme="ZSO">GSMARKETOPERATOR</externalAccount>
                    <InformationOrigin_TimeSeries>
                        <businessCode>16G</businessCode>
                        <Period>
                            <timeInterval>2020-01-13T05:00Z/2020-01-14T05:00Z</timeInterval>
                            <direction.gasDirectionCode>Z03</direction.gasDirectionCode>
                            <quantity.amount>200</quantity.amount>
                        </Period>
                    </InformationOrigin_TimeSeries>
                </External_Account>
            </NominationType>
        </ConnectionPoint>
    </Internal_Account>
</NominationResponse_Document>
```


5.3.4 Non-matching nomination (end user points)

The NOMRES contains the same values as the NOMINT, provided the nominated quantities are not higher than the contracted capacity.

Generic content

Element	Description	Content
<identification>	*See MIG*	
<version>	*See MIG*	
<applicationContext>	Not used	
<documentCode>	Identification of the document type	“08G”
<creationDateTime>	*See MIG*	
<validityPeriod>	*See MIG*	
<issuer_MarketParticipant.identification>	*See MIG*	

<issuer_MarketParticipant.marketRole.roleCode>	Role of the issuing party (TSO)	"ZSO"
<recipient_MarketParticipant.identification	*See MIG*	
<recipient_MarketParticipant.marketRole.roleCode>	Role of the receiving party (BRP)	"ZSH"

Corresponding nomination document

Element	Description	Content
<nomination_Document.identification>	*See MIG*	
<nomination_Document.version>	*See MIG*	
<nomination_Document.documentCode>	*See MIG*	
<nomination_Document.singleSidedBRPSource_MarketParticipant.identification>	Not used	

Internal_Account and ConnectionPoint

Element	Description	Content
<internalAccount>	Gasunie portfolio code, format "GSBRP". codingScheme = "305"	
<internalAccountTso>	Not used	
<ConnectionPoint> <identification>	Identification of the connection point. codingScheme = "305" or codingScheme = "ZSO"	Gasunie code or EIC
<measureUnit.unitOfMeasureCode>	Unit code	"KW1" (kWh per hour)
<NominationType> <nominationCode>	Double sided	"A02" (double sided)

External_Account and Period

Element	Description	Content
<External_Account.externalAccount>	The counter portfolio	"END USER"
<External_Account.externalAccount.Tso>	Not used	
<InformationOrigin_TimeSeries.businessCode>	*See MIG*	"16G"
<Period> *<timeInterval>*	*See MIG*	
<direction.gasDirectionCode>	Direction of gas transfer	"Z03" (exit/sell)
<quantity.amount>	Amount to be transferred.	Natural number (0 and up)
<Status> *<statusCode>*	*See MIG*	See table 'NOMRES status codes' under section 6.3

If a nomination was expected but not received, the confirmation will contain:

- <nomination_Document.identification>DEFAULT</nomination_Document.identification>
- <External_Account.externalAccount>UNKNOWN</External_Account.externalAccount>

Decomposition_Quantity

Not used for non-matching confirmations.

Example message

```
<?xml version="1.0" encoding="UTF-8"?>
<NominationResponse_Document xmlns="urn:easee-gas.eu:edigas:BrpNominationAndMatching:NominationResponseDocument:6:1"
schemaVersion="1">
    <identification>NOMRES-04G-NonMatching</identification>
```

```
    <version>1</version>
    <documentCode>08G</documentCode>
    <creationDateTime>2020-01-12T19:30:47Z</creationDateTime>
    <validityPeriod>2020-01-13T05:00Z/2020-01-14T05:00Z</validityPeriod>
    <issuer_MarketParticipant.identification codingScheme="305">21X-NL-A-A0A0A-
Z</issuer_MarketParticipant.identification>
    <issuer_MarketParticipant.marketRole.roleCode>ZSO</issuer_MarketParticipant.marketRole.roleCode>
    <recipient_MarketParticipant.identification
codingScheme="305">RecipientEIC</recipient_MarketParticipant.identification>
    <recipient_MarketParticipant.marketRole.roleCode>ZSH</recipient_MarketParticipant.marketRole.roleCode>
    <nomination_Document.identification>NOMINT-04G-NonMatching</nomination_Document.identification>
    <nomination_Document.version>1</nomination_Document.version>
    <nomination_Document.documentCode>04G</nomination_Document.documentCode>
    <Internal_Account>
        <internalAccount codingScheme="ZSO">GSBRP</internalAccount>
        <ConnectionPoint>
            <identification codingScheme="ZSO">Example-ConnectionPoint</identification>
            <measureUnit.unitOfMeasureCode>KW1</measureUnit.unitOfMeasureCode>
            <InformationOrigin_TimeSeries>
                <businessCode>16G</businessCode>
                <Period>
                    <timeInterval>2020-01-13T05:00Z/2020-01-13T06:00Z</timeInterval>
                    <direction.gasDirectionCode>Z02</direction.gasDirectionCode>
                    <quantity.amount>100</quantity.amount>
                </Period>
                <Period>
                    <timeInterval>2020-01-13T06:00Z/2020-01-14T05:00Z</timeInterval>
                    <direction.gasDirectionCode>Z02</direction.gasDirectionCode>
                    <quantity.amount>120</quantity.amount>
                </Period>
            </InformationOrigin_TimeSeries>
        </ConnectionPoint>
    </Internal_Account>
</NominationResponse_Document>
```

5.4 Functional examples

Examples are provided for the three nomination types used by BRP's.

5.4.1 Border point nomination

BRP transports 100.000 kWh/hour from the Fluxys grid (Belgium) into the GTS grid through interconnection point VIP BENE. The BRP sends a nomination containing the following:

Nomination Document (NOMINT)			
Document Type	01G		
Connection Point	VIP BENE (EIC 21Z000000000503T)		
Counter Portfolio	**Time interval (UTC)**	**Direction**	**Quantity per hour**
[Fluxys counter]	04:00 – 04:00	Z02 (entry)	100.000

Provided the BRP has booked sufficient capacity, the nomination is accepted and matched with the values nominated at the adjacent TSO (Fluxys). If a smaller quantity of 90.000 kWh/hour was nominated with Fluxys, the NOMRES will contain the following:

Nomination Response Document (NOMRES)				
Document Type	08G			
Connection Point	VIP BENE (EIC 21Z000000000503T)			
Counter Portfolio	**Time interval (UTC)**	**businessCode**	**Direction**	**Quantity per hour**
[NNO counter]	04:00 – 04:00	16G (confirmed)	Z02 (entry)	90.000
		18G (nominated at NNO)	Z03 (exit)	100.000

The BRP can renominate to resolve the mismatch. If a renomination of 100.000 kWh/hour is sent to Fluxys, the nominations will be matched again resulting in a NOMRES from GTS containing:

Nomination Response Document (NOMRES)				
Document Type	08G			
Connection Point	VIP BENE (EIC 21Z000000000503T)			
Counter Portfolio	**Time interval (UTC)**	**businessCode**	**Direction**	**Quantity per hour**
[NNO counter]	04:00 – 04:00	16G (confirmed)	Z02 (entry)	100.000
		18G (nominated at NNO)	Z03 (exit)	100.000

5.4.2 TTF nominations

Two BRP's that wish to make a transfer via TTF send in the following nominations.

Nomination Document (NOMINT) from GSBRP1			
Document Type	03G		
Connection Point	TTF (EIC 21YNL----TTF---1)		
Counter Portfolio	**Time interval (UTC)**	**Direction**	**Quantity per hour**
GSBRP2	04:00 – 04:00	Z02 (entry/buy)	50.000

Nomination Document (NOMINT) from GSBRP2			
Document Type	03G		
Connection Point	TTF (EIC 21YNL----TTF---1)		
Counter Portfolio	**Time interval (UTC)**	**Direction**	**Quantity per hour**
GSBRP1	04:00 – 04:00	Z03 (exit/sell)	50.000

These nominations are then matched, resulting in a settled deal confirmed to both parties:

Nomination Response Document (NOMRES) for GSBRP1				
Document Type	08G			
Connection Point	TTF (EIC 21YNL----TTF---1)			
Counter Portfolio	**Time interval (UTC)**	**businessCode**	**Direction**	**Quantity per hour**
GSBRP2	04:00 – 04:00	16G (confirmed)	Z02 (entry/buy)	50.000
		18G (counter nomination)	Z03 (exit/sell)	50.000

Nomination Response Document (NOMRES) for GSBRP2				
Document Type	08G			
Connection Point	TTF (EIC 21YNL----TTF---1)			
Counter Portfolio	**Time interval (UTC)**	**businessCode**	**Direction**	**Quantity per hour**
GSBRP1	04:00 – 04:00	16G (confirmed)	Z03 (exit/sell)	50.000
		18G (counter nomination)	Z02 (entry/buy)	50.000

5.4.3 Gas exchange nominations

The exchange (market operator) sends in a nomination containing the total of trades per customer:

Nomination Document (NOMINT) from GSEXCHANGE			
Document Type	02G		
Connection Point	TTF (EIC 21YNL----TTF---1)		
Counter Portfolio	**Time interval (UTC)**	**Direction**	**Quantity per hour**
GSBRP1	04:00 – 04:00	Z02 (entry/buy)	50.000
GSBRP2	04:00 – 04:00	Z03 (exit/sell)	30.000
GSBRP3	04:00 – 04:00	Z03 (exit/sell)	20.000

This nomination is confirmed, without matching, to the exchange:

Nomination Response Document (NOMRES) for GSEXCHANGE				
Document Type	08G			
Connection Point	TTF (EIC 21YNL----TTF---1)			
Counter Portfolio	**Time interval (UTC)**	**businessCode**	**Direction**	**Quantity per hour**
GSBRP1	04:00 – 04:00	16G (confirmed)	Z02 (entry/buy)	50.000
GSBRP3	04:00 – 04:00	16G (confirmed)	Z03 (exit/sell)	30.000
GSBRP4	04:00 – 04:00	16G (confirmed)	Z03 (exit/sell)	20.000

All three BRP's in this example also receive a confirmation. GSBRP1 has sent in a TTF nomination with counter GSBRP2 (see previous example). The exchange deal is added to the TTF confirmation:

Nomination Response Document (NOMRES) for GSBRP1				
Document Type	08G			
Connection Point	TTF (EIC 21YNL----TTF---1)			
Counter Portfolio	**Time interval (UTC)**	**businessCode**	**Direction**	**Quantity per hour**
GSBRP2	04:00 – 04:00	16G (confirmed)	Z02 (entry/buy)	50.000
		18G (counter nomination)	Z03 (exit/sell)	50.000
GSEXCHANGE	04:00 – 04:00	16G (confirmed)	Z02 (entry/buy)	50.000
		18G (counter nomination)	Z03 (exit/sell)	50.000

5.4.4 BBL nominations

BRP 1 has a portfolio with BBL Company (BLBRP1P) as well as with GTS (GSBRP1). After BLBRP1P nominates 100.000 kWh/hour at the BBL, this nominated and confirmed quantity is automatically transferred to GSBRP1 via TTF. This transfer is added to the TTF confirmation, resulting in:

Nomination Response Document (NOMRES) for GSBRP1				
Document Type	08G			
Connection Point	TTF (EIC 21YNL----TTF---1)			
Counter Portfolio	**Time interval (UTC)**	**businessCode**	**Direction**	**Quantity per hour**
GSBRP2	04:00 – 04:00	16G (confirmed)	Z02 (entry/buy)	50.000
		18G (counter nomination)	Z03 (exit/sell)	50.000
GSEXCHANGE	04:00 – 04:00	16G (confirmed)	Z02 (entry/buy)	50.000
		18G (counter nomination)	Z03 (exit/sell)	50.000
BLBRP1P	04:00 – 04:00	16G (confirmed)	Z03 (exit/sell)	100.000
		18G (counter nomination)	Z02 (entry/buy)	100.000

Note: The TTF nomination GSBRP1 sent only contains the counter portfolio GSBRP2. GSEXCHANGE and BLBRP1P were added to the confirmation by GTS. GSBRP1 may add BLBRP1P to its TTF nomination, but this is not necessary.

5.4.5 End user point nomination

The BRP delivers gas to an industry connected to the GTS grid. The following nomination is sent:

Nomination Document (NOMINT)			
Document Type	04G		
Connection Point	Any end point where capacity has been booked		
Counter Portfolio	**Time interval (UTC)**	**Direction**	**Quantity per hour**
END USER	04:00 – 04:00	Z03 (exit/sell)	50.000

The confirmation will contain the following information:

Nomination Response Document (NOMRES)			
Document Type	08G		
Connection Point	Any end point where capacity has been booked		
Counter Portfolio	**Time interval (UTC)**	**Direction**	**Quantity per hour**
END USER	04:00 – 04:00	Z03 (exit/sell)	50.000

6. Balancing and settlement process

GTS uses two processes in this category: within day balancing actions (WDBA) and TTFB relations.

Risk of not (correctly) implementing
Any BRP can be included in a 'Within Day Balancing Action'. Imbalances can be caused by unexpected mismatches (for example, in case of IT issues or force majeure at an exchange or at GTS). Not being able to process the Market Situation message, means not having the amount and price of the lots to be allocated ahead of the hours of delivery. This may impede efficiently managing the POS.

If a balancing document cannot be sent, the imbalance meant to be transferred will be allocated completely to the BRP. The BRP must then act on this imbalance themselves, risking a Within Day Balancing Action or an end of day imbalance fee.

6.1 General information

To protect the total system balance, GTS performs Within Day Balancing Actions. The results are sent to the imbalance causing BRP's via the Market Situation (MARSIT) message.

Message type	Sender	Receiver	Timing
MARSIT	GTS	BRP	Any hour during a gas day, around hh:22

BRP's that deliver gas to protected users via the GTS grid can have their imbalance automatically transferred to another BRP in the GTS grid via a balancing agreement. For this the message types BALDOC and BALCON are used, which are only available in Edig@s version 5.1.

Message type	Sender	Receiver	Timing
BALDOC	BRP	GTS	Before 05:00 day ahead
ACKNOW	GTS	BRP	Within 5 minutes after BALDOC has been received
BALCON	GTS	BRP	Every full hour after 14:00 till 22:00 next gasday

6.2 Market Situation message (MARSIT)

This message is used for Within Day Balancing Actions, used only by GTS.

Process
If the GTS system balance signal (SBS) exceeds the predefined dark green buffer zone, a Within Day Balancing Action (WDBA) is triggered automatically. The excess or shortage of gas is traded through a transaction at ICE Endex's Within Day Market.

All BRP's that are 'causer' of the imbalance receive a Market Situation message (MARSIT) in which a proportional amount of the total sold or bought amount is allocated. This message also contains the price at which the amount was traded. One MARSIT may contain multiple transactions.

Note: *Receiving a MARSIT does not completely balance your portfolio. Monitor your POS at all times!*

Timing
The WDBA can be triggered once every hour. Announcements are published to ICE Endex at hh:10

and hh:15. An order is published to ICE Endex between hh:21 and hh:22 and the result of the transaction is distributed to all imbalance causers immediately afterwards via the MARSIT with document code “ANZ”.

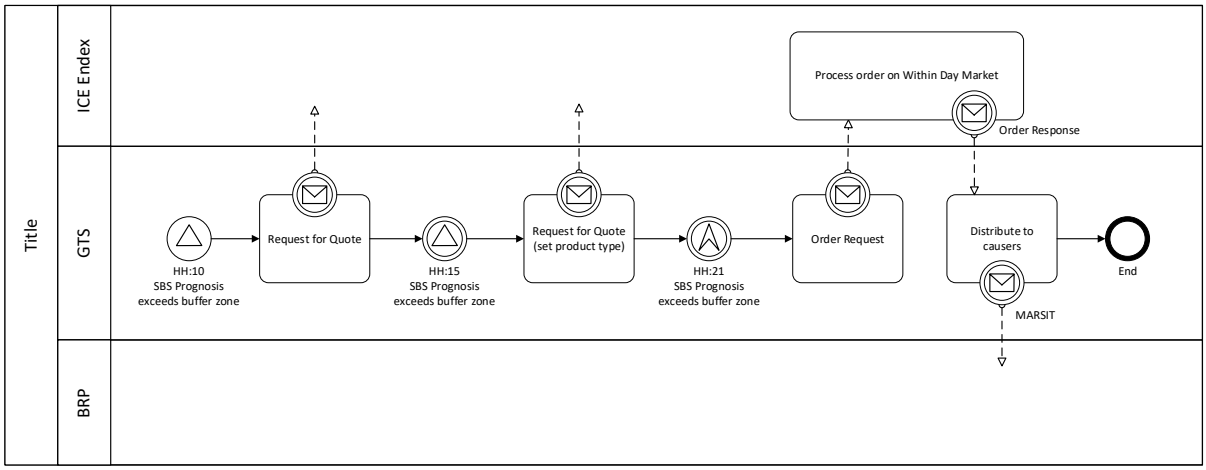

Figure 8: Within Day Balancing Actions and MARSIT messages

If the SBS is in the light green buffer zone, a ‘Remainder of Day’ product is distributed. Allocation of the amount starts four hours after the imbalance hour and ends at the last hour of the gas day. If the SBS is in the orange or red buffer zone, a ‘Single Clock Hour’ product is distributed. Allocation of the called amount takes place the next hour.

Note: *The product type is determined at the second announcement, at hh:15.*

The MARSIT is also used in an emergency process, where the GTS dispatching team orders specific customers to deliver or take in gas. The gas is transferred from the imbalance causers to these specific shippers and allocated using the MARSIT with document code “AVI”.

Generic content

Element	Description	Content
<identification>	*See MIG*	
<version>	*See MIG*	
<documentCode>	Type of message: WDBA result or emergency measure	“ANZ”; “AVI”
<creationDateTime>	*See MIG*	
<validityPeriod>	*See MIG*	
<issuer_MarketParticipant.identification>	*See MIG*	
<issuer_MarketParticipant.marketRole.roleCode>	Role of the issuing party (BRP)	“ZUK”
<recipient_MarketParticipant.identification	*See MIG*	
<recipient_MarketParticipant.marketRole.roleCode>	Role of the receiving party	“ZSH”

MarketArea

Element	Description	Content
<MarketArea> <identification>	Identification of the connection point. codingScheme = “305” or codingScheme = “ZSO”	305: “21Y000000000014L” ZSO: “BVP”

Account and Period

Element	Description	Content
<Account> <identification>	Portfolio code; codingScheme = "ZSO"	"GSBRP"
<accountCode>	Balance Responsible Party Account	"ZOE"
<account.Tso>	Not used	
<TimeSeries> *<businessCode>*	*See MIG*	"Z01" (allocated)
<measureUnit.unitOfMeasureCode>	Unit code	"KW1" (kWh per hour)
<currency.currencyCode>	Currency	"EUR"

Transaction

These elements are repeated for each transaction.

Element	Description	Content
<Transaction> <identification>	Transaction identification	"TR" followed by six numbers "NO_TRANS" for hour(s) with no transaction
<Period> *<timeInterval>*	*See MIG*	
<status.statusCode>	Status code	"05G" (definitive)
<accountDirection.accountDirectionCode>	Direction	"ZPD" = Debit (exit); "ZPE" = Credit (entry).
<accountDirection.account_Quantity.amount>	Amount	Natural number (0 and up)
<price.amount>	Price in Euros per KWh	Number with six decimals

Note: *Even though the process can only be performed once every hour, there can be multiple transactions per hour because of the start times of delivery. For example, if a 'Remainder of Day' product is distributed at 13:22 LET, starting at 17:00 LET, and another is distributed the next hour, the hours from 18:00 will all contain two transactions.*

Example message


```xml
<?xml version="1.0" encoding="UTF-8"?>
<MarketSituation_Document xmlns="urn:easee-gas.eu:edigas:BalancingAndSettlement:MarketSituationDocument:6:1"
schemaVersion="1">
    <identification>MARSITYYYYMMDDA00001</identification>
    <version>1</version>
    <documentCode>ANZ</documentCode>
    <creationDateTime>2024-01-18T12:22:47Z</creationDateTime>
    <validityPeriod>2024-01-18T05:00Z/2024-01-19T05:00Z</validityPeriod>
    <issuer_MarketParticipant.identification codingScheme="305">21X-NL-A-A0A0A-
Z</issuer_MarketParticipant.identification>
    <issuer_MarketParticipant.marketRole.roleCode>ZUK</issuer_MarketParticipant.marketRole.roleCode>
    <recipient_MarketParticipant.identification
codingScheme="305">Recipient_EIC</recipient_MarketParticipant.identification>
    <recipient_MarketParticipant.marketRole.roleCode>ZSH</recipient_MarketParticipant.marketRole.roleCode>
    <MarketArea>
        <identification codingScheme="305">21Y000000000014L</identification>
        <Account>
            <identification codingScheme="ZSO">GSBRP</identification>
            <accountCode>ZOE</accountCode>
            <TimeSeries>
                <businessCode>Z01</businessCode>
                <measureUnit.unitOfMeasureCode>KW1</measureUnit.unitOfMeasureCode>
                <currency.currencyCode>EUR</currency.currencyCode>
                <Transaction>
                    <identification>NO_TRANS</identification>
                    <Period>
                        <timeInterval>2024-01-18T05:00Z/2024-01-18T16:00Z</timeInterval>
                        <status.statusCode>05G</status.statusCode>
```

```xml
                    <accountDirection.accountDirectionCode>ZPD</accountDirection.accountDirectionCode>
                    <accountDirection.account_Quantity.amount>0</accountDirection.account_Quantity.amount>
                    <price.amount>0.000000</price.amount>
                </Period>
            </Transaction>
            <Transaction>
                <identification>TR123456</identification>
                <Period>
                    <timeInterval>2024-01-18T16:00Z/2024-01-19T05:00Z</timeInterval>
                    <status.statusCode>05G</status.statusCode>
                    <accountDirection.accountDirectionCode>ZPD</accountDirection.accountDirectionCode>
                    <accountDirection.account_Quantity.amount>12345</accountDirection.account_Quantity.amount>
                    <price.amount>0.123456</price.amount>
                </Period>
            </Transaction>
        </TimeSeries>
    </Account>
  </MarketArea>
</MarketSituation_Document>
```


6.3 Balance agreements (TTF-B)

This process is part of the section “Balancing and settlement Process” of the Edig@s 5.1 Message Implementation Guidelines and is only used by GTS.

Note: *There are no version 6.1 Edig@s messages for this process, so version 5.1 messages are used. This also means the BALDOC and BALCON message may contain more than one gas day.*

Purpose

The balancing agreement message is used by parties to inform GTS of a balancing deal between these parties. The agreed (relative) amount (percentage, minimum or maximum) of the total amount transported to the RNB’s (regional system operators) on behalf of the balance responsible party is allocated to the balance supplier instead.

Process

The balancing agreement message (BALDOC) is sent to the Balancing Virtual Trading Point (VTP) TTF-B. Messages are validated within five minutes after reception, triggering an ACKNOW.

Matching takes place between the nominations received from the BRP and its counter portfolios. A supplier role message will have to match with a receiver role message and vice versa. If there is a mismatch, both parties will be confirmed zero values. Once both parties have nominated the same amount, percentages, etc. the deal is settled. A settled deal can only be changed when both parties renominate the same new quantity. Status changes will be sent in the confirmation message.

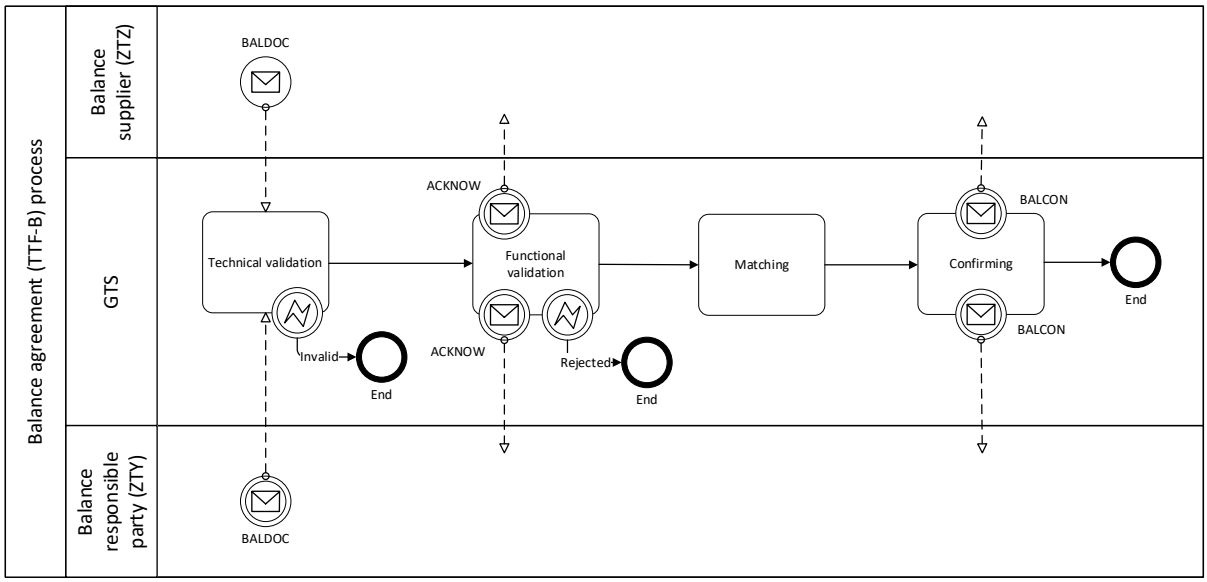

Figure 9: Balance agreement (TTF-B) process

Timing

BALDOC's can be submitted up to 400 days in advance, up until one hour before the start of the gas day and are matched the next full hour after receipt.

6.3.1 Balance Document (BALDOC)

The BALDOC contains one or more balancing agreements between the issuing BRP and its counter party or parties.

Generic content

Element	Description	Content
<identification>	*See MIG*	
<version>	*See MIG*	
<type>	Identification of the document type	"ALU"
<creationDateTime>	*See MIG*	
<validityPeriod>	*See MIG*	
<contractReference>	Gasunie portfolio code; codingScheme = "ZSO"	
<contractType>	Type of contract	"CT"
<issuer_MarketParticipant.identification>	*See MIG*	
<issuer_MarketParticipant.marketRole.code>	Role of the issuing party (BRP)	Supplier: "ZTZ" Receiver: "ZTY"
<recipient_MarketParticipant.identification	*See MIG*	
<recipient_MarketParticipant.marketRole.code>	Role of the receiving party	"ZSO"
<applicationContext>	Not used	

ConnectionPoint

Element	Description	Content
<ConnectionPoint> <identification>	Identification of the connection point.	305: "21Y000000000012P" ZSO: "TTFB"

	codingScheme = “305” or codingScheme = “ZSO”	
<measureUnit.code>	Unit code	“KW1” (kWh per hour)

Account

Element	Description	Content
<Account> <identification>	Gasunie portfolio code of issuer; codingScheme = “ZSO”	“GSBRP“
<accountTso>	Not used	

Agreement

These elements are repeated for each distinct agreement.

Element	Description	Content
<Agreement> < identification >	Identification to be agreed between the two parties.	
<period.timeInterval>	*See MIG*	
<agreeingParty_Account.identification>	Counter portfolio code; codingScheme = “ZSO”	Must be a GTS portfolio code
<agreeingParty_Account.AccountTso>	Not used	
<referenceCategory>	End user category to which the agreement applies	“G1A”, “G2A”, “G2C”, “GKV”, “GGV”, “GXX”, “GMN”.
<direction.code>	Direction of gas transfer	“Z02” (marketRole ZTZ) or “Z03” (marketRole ZTY)
<percent_Quantity.amount>	The percentage of the imbalance to be allocated.	Natural number (0 to 100%)
<excluded_Quantity.amount>	Reduced amount. This quantity is excluded.	Natural number (0 and up)
<max_Quantity.amount>	The maximum amount to be allocated.	Natural number (0 and up)

Example message


```xml
<?xml version="1.0" encoding="UTF-8"?>
<BalancingAgreement_Document release="2" xmlns="urn:easeegas.eu:edigas:balancing:balancingagreementdocument:5:1">
    <identification>BALDOCYYYYMMDDA00001</identification>
    <version>1</version>
    <type>ALU</type>
    <creationDateTime>2023-12-29T13:12:47Z</creationDateTime>
    <validityPeriod>2024-01-01T05:00Z/2024-02-01T05:00Z</validityPeriod>
    <contractReference>GSBRP</contractReference>
    <contractType>CT</contractType>
    <issuer_MarketParticipant.identification codingScheme="305">BRP-EIC</issuer_MarketParticipant.identification>
    <issuer_MarketParticipant.marketRole.code>ZTZ</issuer_MarketParticipant.marketRole.code>
    <recipient_MarketParticipant.identification codingScheme="305">21X-NL-A-A0A0A-
Z</recipient_MarketParticipant.identification>
    <recipient_MarketParticipant.marketRole.code>ZSO</recipient_MarketParticipant.marketRole.code>
    <ConnectionPoint>
        <identification codingScheme="ZSO">TTFB</identification>
        <measureUnit.code>KW1</measureUnit.code>
        <Account>
            <identification codingScheme="ZSO">GSBRP</identification>
            <Agreement>
                <identification>AGREEMENT_G1A_001</identification>
                <period.timeInterval>2024-01-01T05:00Z/2024-02-01T05:00Z</period.timeInterval>
                <agreeingParty_Account.identification
codingScheme="ZSO">GSCOUNTERBRP</agreeingParty_Account.identification>
                <referenceCategory>G1A</referenceCategory>
                <direction.code>Z02</direction.code>
                <percent_Quantity.amount>100</percent_Quantity.amount>
```

```
                <excluded_Quantity.amount>0</excluded_Quantity.amount>
                <max_Quantity.amount>0</max_Quantity.amount>
            </Agreement>
            <Agreement>
                <identification>AGREEMENT_G2A_001</identification>
                <period.timeInterval>2024-01-01T05:00Z/2024-02-01T05:00Z</period.timeInterval>
                <agreeingParty_Account.identification
codingScheme="ZSO">GSCOUNTERBRP</agreeingParty_Account.identification>
                <referenceCategory>G2A</referenceCategory>
                <direction.code>Z02</direction.code>
                <percent_Quantity.amount>80</percent_Quantity.amount>
                <excluded_Quantity.amount>0</excluded_Quantity.amount>
                <max_Quantity.amount>0</max_Quantity.amount>
            </Agreement>
        </Account>
    </ConnectionPoint>
</BalancingAgreement_Document>
```


6.3.2 Balance Confirmation (BALCON) (Edig@s version 5.1)

The BALCON contains the confirmed amounts per agreement.

Generic content

Element	Description	Content
<identification>	*See MIG*	
<version>	*See MIG*	
<type>	Identification of the document type	"ALW"
<creationDateTime>	*See MIG*	
<validityPeriod>	*See MIG*	
<contractReference>	Gasunie portfolio code; codingScheme = "ZSO"	
<contractType>	Type of contract	"CT"
<issuer_MarketParticipant.identification>	*See MIG*	
<issuer_MarketParticipant.marketRole.code>	Role of the issuing party	"ZSO"
<recipient_MarketParticipant.identification	*See MIG*	
<recipient_MarketParticipant.marketRole.code>	Role of the receiving party (BRP)	Supplier: "ZTZ" Receiver: "ZTY"
<applicationContext>	Not used	

ConnectionPoint

Element	Description	Content
<ConnectionPoint> <identification>	Identification of the connection point. codingScheme = "305" or codingScheme = "ZSO"	305: "21Y000000000012P" ZSO: "TTFB"
<measureUnit.code>	Unit code	"KW1" (kWh per hour)

Account

Element	Description	Content
<Account> <identification>	Gasunie portfolio code; codingScheme = "ZSO"	Must be a GTS portfolio code
<accountTso>	Not used	

Agreement

These elements are repeated for each distinct agreement.

Element	Description	Content
<Agreement> <issuer_Document.identification>	Identification of the corresponding BALDOC.	
<issuer_Document.version>	Version number of the corresponding BALDOC.	
<identification>	*See MIG*	
<period.timeInterval>	*See MIG*	
<agreeingParty_Account.identification>	Counter GTS portfolio, codingScheme = "ZSO"	Must be a GTS portfolio code
< agreeingParty_Account.AccountTso>	Not used	
< referenceCategory>	End user category to which the agreement applies	"G1A", "G2A", "G2C", "GKV", "GGV", "GXX", "GMN".
< direction.code>	Direction of gas transfer	"Z02" (marketRole ZTZ) or "Z03" (marketRole ZTY)
<percent_Quantity.amount>	The percentage of the imbalance to be allocated.	Natural number (0 to 100)
<reduced_Quantity.amount>	Reduced amount. This quantity is excluded.	Natural number (0 and up)
<max_Quantity.amount>	The maximum amount to be allocated.	Natural number (0 and up)
<Reason> *<code>* *<text>*	*See MIG*	See table 'BALCON reason codes'

BALCON Reason codes

The table below lists the reasonCodes most frequently encountered in the BALCON.

Reason Code	Reason Text	Explanation
12G	Settled	Both parties nominated the same amount and the deal is settled.
13G	Unchanged settled	One party renominated after a deal was settled. The settled deal is unchanged.
14G	No counter nomination	The counter party has not (yet) nominated.
64G	Mismatch	There is a mismatch between the agreement ID and/or the quantities. Values of zero are confirmed.

Example message


```xml
<?xml version="1.0" encoding="UTF-8"?>
<BalancingConfirmation_Document release="2"
xmlns="urn:easeegas.eu:edigas:balancing:balancingconfirmationdocument:5:1">
    <identification>BALCONYYYYMMDDA12345</identification>
    <version>1</version>
    <type>ALW</type>
    <creationDateTime>2024-12-29T14:00:22Z</creationDateTime>
    <validityPeriod>2024-01-01T05:00Z/2024-12-01T05:00Z</validityPeriod>
    <contractReference>GSBRP</contractReference>
    <contractType>CT</contractType>
    <issuer_MarketParticipant.identification codingScheme="305">21X-NL-A-A0A0A-
Z</issuer_MarketParticipant.identification>
    <issuer_MarketParticipant.marketRole.code>ZSO</issuer_MarketParticipant.marketRole.code>
    <recipient_MarketParticipant.identification codingScheme="305">BRP-
EIC</recipient_MarketParticipant.identification>
    <recipient_MarketParticipant.marketRole.code>ZTZ</recipient_MarketParticipant.marketRole.code>
    <ConnectionPoint>
        <identification codingScheme="ZSO">TTFB</identification>
        <measureUnit.code>KW1</measureUnit.code>
        <Account>
            <identification codingScheme="ZSO">GSBRP</identification>
            <Agreement>
```

```
            <issuer_Document.identification>BALDOCYYYYMMDDA00001</issuer_Document.identification>
            <issuer_Document.version>1</issuer_Document.version>
            <identification>AGREEMENT_G1A_001</identification>
            <period.timeInterval>2024-01-01T05:00Z/2024-02-01T05:00Z</period.timeInterval>
            <agreeingParty_Account.identification
codingScheme="ZSO">GSCOUNTERBRP</agreeingParty_Account.identification>
            <referenceCategory>G1A</referenceCategory>
            <direction.code>Z02</direction.code>
            <percent_Quantity.amount>100</percent_Quantity.amount>
            <reduced_Quantity.amount>0</reduced_Quantity.amount>
            <max_Quantity.amount>0</max_Quantity.amount>
            <Reason>
                <code>01G</code>
            </Reason>
        </Agreement>
        <Agreement>
            <issuer_Document.identification>BALDOCYYYYMMDDA00001</issuer_Document.identification>
            <issuer_Document.version>1</issuer_Document.version>
            <identification>AGREEMENT_G2A_001</identification>
            <period.timeInterval>2024-01-01T05:00Z/2024-02-01T05:00Z</period.timeInterval>
            <agreeingParty_Account.identification
codingScheme="ZSO">GSCOUNTERBRP</agreeingParty_Account.identification>
            <referenceCategory>G2A</referenceCategory>
            <direction.code>Z02</direction.code>
            <percent_Quantity.amount>80</percent_Quantity.amount>
            <reduced_Quantity.amount>0</reduced_Quantity.amount>
            <max_Quantity.amount>0</max_Quantity.amount>
            <Reason>
                <code>01G</code>
            </Reason>
        </Agreement>
    </Account>
  </ConnectionPoint>
</BalancingConfirmation_Document>
```


6.4 Functional examples

The examples below assume LET in summer time (CEST/UTC+2).

6.4.1 Market Situation message (MARSIT)

At 21:10, 21:15 and 21:20 LET the SBS exceeds the dark green buffer zone into the light green zone for hour 21:00 to 22:00 LET (19:00 to 20:00 UTC), shown in the red square:

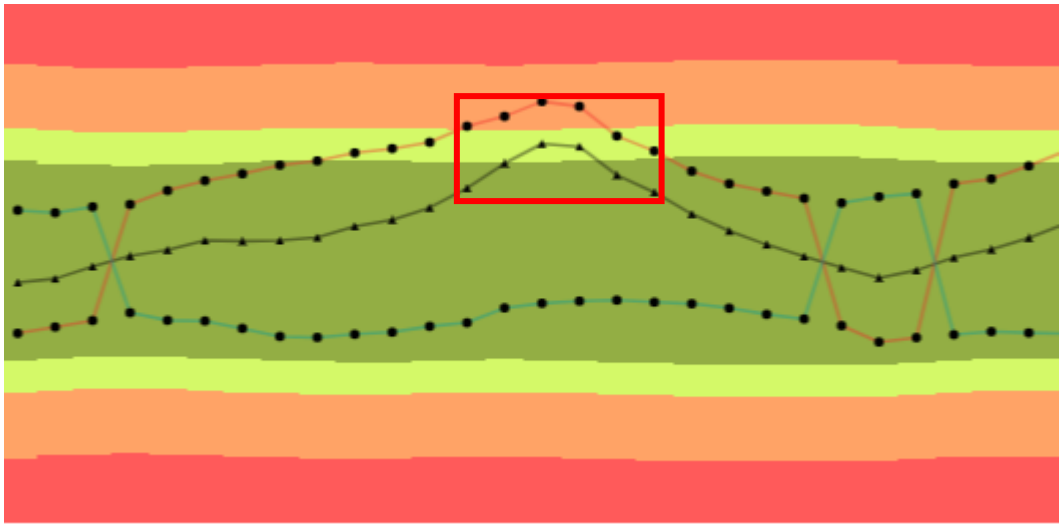

This triggers a Within Day Balancing Action (WDBA). All BRP's with a POS in the same direction as the SBS (in this case, short) will receive a MARSIT allocating part of the WDBA to their POS. This brings the SBS back to the edge of the dark green zone. The MARSIT contains the following information:

Market Situation Document (MARSIT)	
Document Type	ANZ

Connection Point	Balancing Virtual Point (BVP) (EIC 21Y000000000014L)			
Transaction ID	**Time interval (UTC)**	**Direction**	**Quantity per hour**	**Price**
NO_TRANS	04:00 – 23:00			
001234	23:00 – 04:00	ZPE (entry/buy)	5.000	0.031234

At 22:10, 22:15 and 22:20 LET the SBS is (still) prognosed to exceed the dark green buffer zone into the light green zone for hour 22:00 to 23:00 LET (20:00 to 21:00 UTC). The previous WDBA was insufficient to rebalance the SBS. Again, all BRP's with a POS in the same direction as the SBS will receive a MARSIT. A BRP that has received a MARSIT from the last WDBA will receive another MARSIT containing the following information:

Market Situation Document (MARSIT)				
Document Type	ANZ			
Connection Point	Balancing Virtual Point (BVP) (EIC 21Y000000000014L)			
Transaction ID	**Time interval (UTC)**	**Direction**	**Quantity per hour**	**Price**
NO_TRANS	04:00 – 23:00			
001234	23:00 – 04:00	ZPE (entry/buy)	5.000	0.031234
001235	24:00 – 04:00	ZPE (entry/buy)	1.000	0.037654

Example message


```xml
<?xml version="1.0" encoding="utf-8"?>
<MarketSituation_Document schemaVersion="1" xmlns="urn:easee-
gas.eu:edigas:BalancingAndSettlement:MarketSituationDocument:6:1">
    <identification>CLRCON20230907A75480</identification>
    <version>1</version>
    <documentCode>ANZ</documentCode>
    <creationDateTime>2023-09-07T08:22:30Z</creationDateTime>
    <validityPeriod>2023-09-07T04:00Z/2023-09-08T04:00Z</validityPeriod>
    <issuer_MarketParticipant.identification codingScheme="305">21X-NL-A-A0A0A-
Z</issuer_MarketParticipant.identification>
    <issuer_MarketParticipant.marketRole.roleCode>ZUK</issuer_MarketParticipant.marketRole.roleCode>
    <recipient_MarketParticipant.identification codingScheme="305">BRP-
EIC</recipient_MarketParticipant.identification>
    <recipient_MarketParticipant.marketRole.roleCode>ZSH</recipient_MarketParticipant.marketRole.roleCode>
    <MarketArea>
        <identification codingScheme="305">21Y000000000014L</identification>
        <Account>
            <identification codingScheme="ZSO">GSBRP</identification>
            <accountCode>ZOE</accountCode>
            <TimeSeries>
                <businessCode>Z01</businessCode>
                <measureUnit.unitOfMeasureCode>KW1</measureUnit.unitOfMeasureCode>
                <currency.currencyCode>EUR</currency.currencyCode>
                <Transaction>
                    <identification>NO_TRANS</identification>
                    <Period>
                        <timeInterval>2023-09-07T04:00Z/2023-09-07T09:00Z</timeInterval>
                        <status.statusCode>05G</status.statusCode>
                        <accountDirection.accountDirectionCode>ZPE</accountDirection.accountDirectionCode>
                        <accountDirection.account_Quantity.amount>0</accountDirection.account_Quantity.amount>
                        <price.amount>0.000000</price.amount>
                    </Period>
                </Transaction>
                <Transaction>
                    <identification>TR010510</identification>
                    <Period>
                        <timeInterval>2023-09-07T09:00Z/2023-09-07T10:00Z</timeInterval>
                        <status.statusCode>05G</status.statusCode>
                        <accountDirection.accountDirectionCode>ZPE</accountDirection.accountDirectionCode>
                        <accountDirection.account_Quantity.amount>12345</accountDirection.account_Quantity.amount>
                        <price.amount>0.021950</price.amount>
                    </Period>
                </Transaction>
                <Transaction>
```

```xml
                <identification>NO_TRANS</identification>
                <Period>
                    <timeInterval>2023-09-07T10:00Z/2023-09-08T04:00Z</timeInterval>
                    <status.statusCode>05G</status.statusCode>
                    <accountDirection.accountDirectionCode>ZPE</accountDirection.accountDirectionCode>
                    <accountDirection.account_Quantity.amount>0</accountDirection.account_Quantity.amount>
                    <price.amount>0.000000</price.amount>
                </Period>
            </Transaction>
        </TimeSeries>
    </Account>
  </MarketArea>
</MarketSituation_Document>
```


6.4.2 Balance agreement (BALDOC/BALCON)

GSBRP has a balance agreement with GSSUPPLIER for the customer categories G1A and G2A. The agreed percentage of the amount that GSBRP delivers to RNB network points for these categories is allocated to GSSUPPLIER via TTFB.

GSBRP sends the following BALDOC to GTS:

Balance Document (BALDOC) from GSBRP				
Document Type	ALU		Role	ZTY
Connection Point	TTFB (EIC 21Y000000000012P)			
Counter Portfolio	**Time interval (UTC)**	**Category code**	**Direction**	**Percentage**
GSSUPPLIER	04:00 – 04:00	G1A	Z03 (exit)	100
		G2A	Z03 (exit)	100

GSSUPPLIER sends the following BALDOC to GTS:

Balance Document (BALDOC) from GSSUPPLIER				
Document Type	ALU		Role	ZTZ
Connection Point	TTFB (EIC 21Y000000000012P)			
Counter Portfolio	**Time interval (UTC)**	**Category code**	**Direction**	**Percentage**
GSSUPPLIER	04:00 – 04:00	G1A	Z02 (entry)	100
		G2A	Z02 (entry)	90

There is a mismatch between the percentages, so the BALCON messages are the following:

Balance Confirmation (BALCON) to GSBRP					
Document Type	ALW		Role	ZTY	
Connection Point	TTFB (EIC 21Y000000000012P)				
Counter Portfolio	**Time interval (UTC)**	**Category code**	**Status**	**Direction**	**Percentage**
GSSUPPLIER	04:00 – 04:00	G1A	12G	Z03 (exit)	100
		G2A	64G	Z03 (exit)	0

Balance Confirmation (BALCON) to GSSUPPLIER			
Document Type	ALW	Role	ZTY
Connection Point	TTFB (EIC 21Y000000000012P)		

Counter Portfolio	Time interval (UTC)	Category code	Status	Direction	Percentage
GSSUPPLIER	04:00 – 04:00	G1A	12G	Z02 (entry)	100
		G2A	64G	Z02 (entry)	0

After GSSUPPLIER changes the percentage for category code G2A to 100 and resubmits the BALDOC, the value for G2A will be confirmed to both parties with status code 12G (settled).

7. Appendix

7.1 Abbreviations and terminology

BRP	Balance Responsible Party
CEST	Central European Summer Time (UTC+2)
CET	Central European Time (UTC+1)
EASEE-gas	European Association for the Streamlining of Energy Exchange - gas
Edig@s	Electronic data interchange – gas (XML format for gas exchange and transport)
EIC	Energy Identification Code
LET	Local European Time (equal to CET in winter, CEST in summer)
MIG	Message Implementation Guidelines (Edig@s)
NNO	Neighbouring Network Operator (adjacent TSO)
POS	Portfolio Onbalans Signaal (Portfolio imbalance signal)
RNB	Regionaal Net Beheerder (regional TSO/local distribution network)
SBS	Systeembalanssignaal (System Balance Signal)
TTF	Title Transfer Facility (virtual network point for gas trade)
TTF-B	Title Transfer Facility – Balancing (virtual network point for balancing agreements)
TSO	Transmission System Operator
VTP	Virtual Trading Point
WDBA	Within Day Balancing Action

7.2 Websites

Official Edig@s website
https://www.edigas.org/

Nederlandse Gasunie N.V.
https://www.gasunie.nl/en

Gasunie Transport Services (GTS)
https://www.gasunietransportservices.nl/en

BBL Company
https://www.bblcompany.com/

EnergyStock
https://www.energystock.com/

Gate Terminal
https://www.gateterminal.com/en/

EemsEnergyTerminal
https://www.eemsenergyterminal.nl/en